EBV Seminar June 2007

Freescale 8-bit Products Overview and Wireless Networking

Presenter: Moshe Levy

Freescale™ and the Freescale logo are trademarks of Freescale Semiconductor, Inc. All other product or service names are the property of their respective owners. © Freescale Semiconductor, Inc. 2006.

freescale™ semiconductor

Wireless Networking using the HCS08

- Freescale Semiconductor
- 8-bit Microcontrollers
  - 8/32 bit Controller Continuum
- Development Tools Overview
  - Discovery Kit
- ZigBee Solutions
  - Next generation PiP

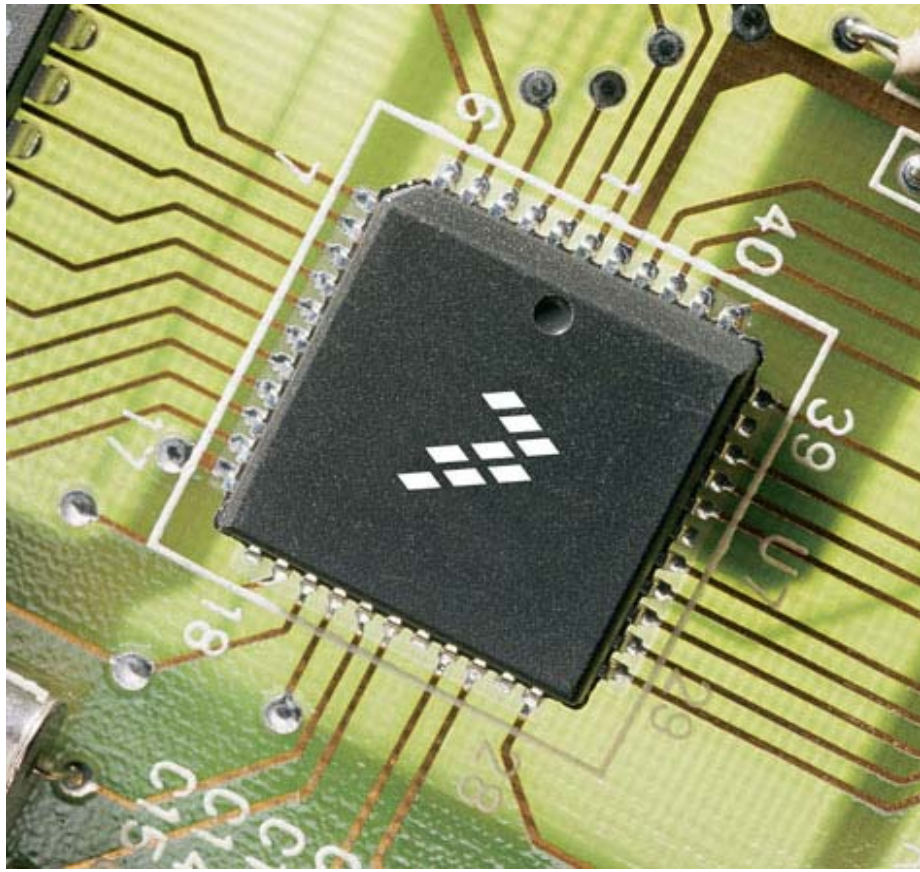

Freescale™ and the Freescale logo are trademarks of Freescale Semiconductor, Inc. All other product or service names are the property of their respective owners. © Freescale Semiconductor, Inc. 2006.

- For the first time: True 8 bit to 32 bit **Processor Continuum**
- Wide range of competitive **low power/low cost** 8 bit MCUs which fit to your application.
- Comprehensive, **free/low cost, easy to use** development tools - Fast Track
- Full **ZigBee solution** hw/sw including ZeeStack, BeeKit, SiP and PiP

Freescale™ and the Freescale logo are trademarks of Freescale Semiconductor, Inc. All other product or service names are the property of their respective owners. © Freescale Semiconductor, Inc. 2006.

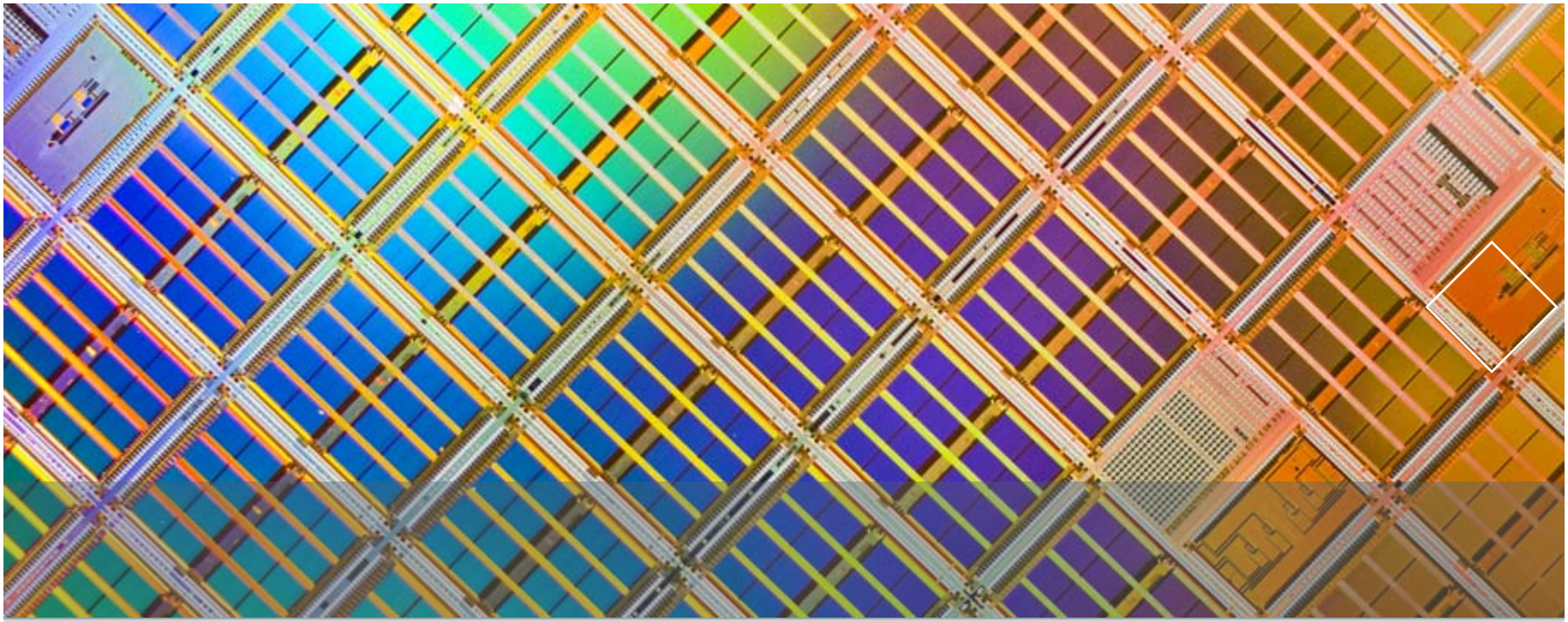

Freescale Semiconductor

freescale™
semiconductor

Operating Around the World

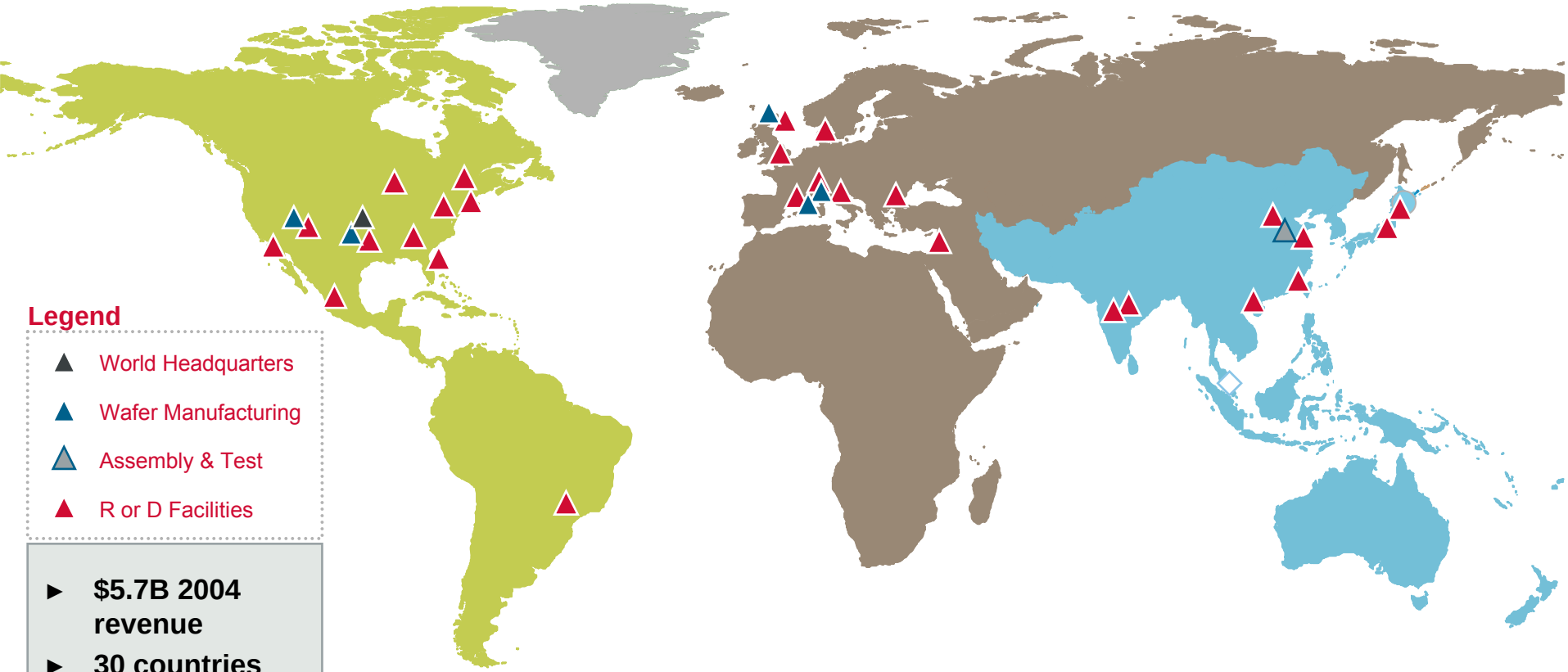

Legend

- World Headquarters
- Wafer Manufacturing
- Assembly & Test
- R or D Facilities

- **$5.7B 2004 revenue**
- **30 countries**
- **10,000+ customers**
- **22,000+ employees**

Americas

- 9, 200 employees
- 4 factories
- 10 design centers

EMEA

- 4,500 employees
- 3 factories
- 8 design centers

Asia Pacific/Japan

- 9,000 employees
- 3 factories
- 8 design centers

Freescale™ and the Freescale logo are trademarks of Freescale Semiconductor, Inc. All other product or service names are the property of their respective owners. © Freescale Semiconductor, Inc. 2006.

freescale™ semiconductor

Internal Worldwide Manufacturing

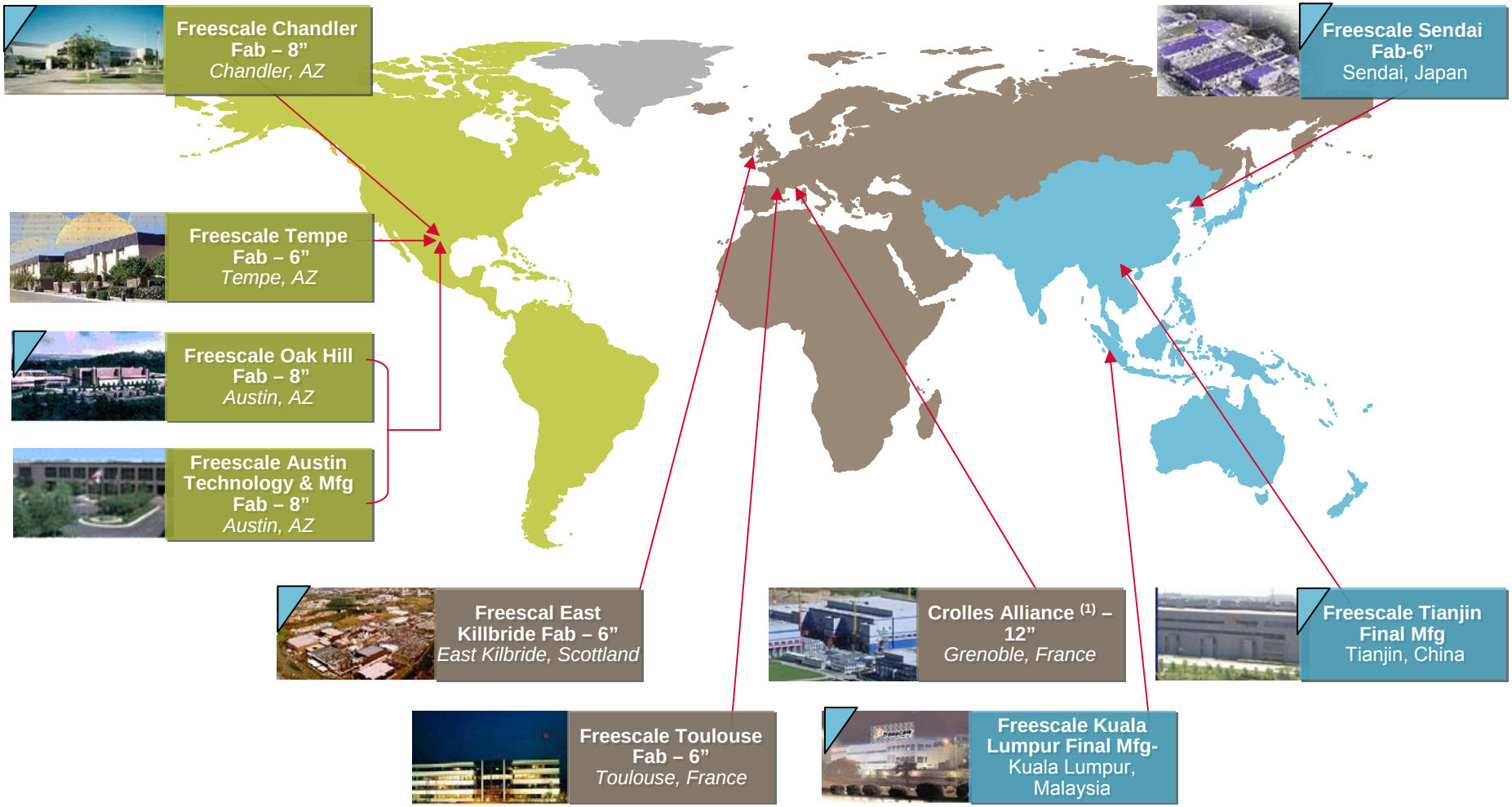

Designates 8bit Manufacturing Sites

Note: Freescale also uses external manufacturing sites such as TSMC

Freescale™ and the Freescale logo are trademarks of Freescale Semiconductor, Inc. All other product or service names are the property of their respective owners. © Freescale Semiconductor, Inc. 2006.

freescale™ semiconductor

Freescale's Business Groups

WMSG

Wireless & Mobile Systems Group

- Platforms for cellular handsets & other products
- Baseband components
- Application processors
- RF components
- Software solutions

NCSG

Networking & Computing Systems Group

- PowerQUICC™ communications processors
- PowerPC® (1) processors
- DSPs
- RF devices
- Network multimedia & connectivity
- SemiCustom ASICs

TSPG

Transportation & Standard Products Group

- Microcontrollers
- Embedded microprocessors
- Analog & mixed-signal integrated circuits
- Sensors
- Digital Signal Controllers

(1) The "PowerPC" name is a trademark of IBM Corp. and is used under license.

Freescale™ and the Freescale logo are trademarks of Freescale Semiconductor, Inc. All other product or service names are the property of their respective owners. © Freescale Semiconductor, Inc. 2006.

freescale™ semiconductor

Freescale's Embedded Processor Continuum

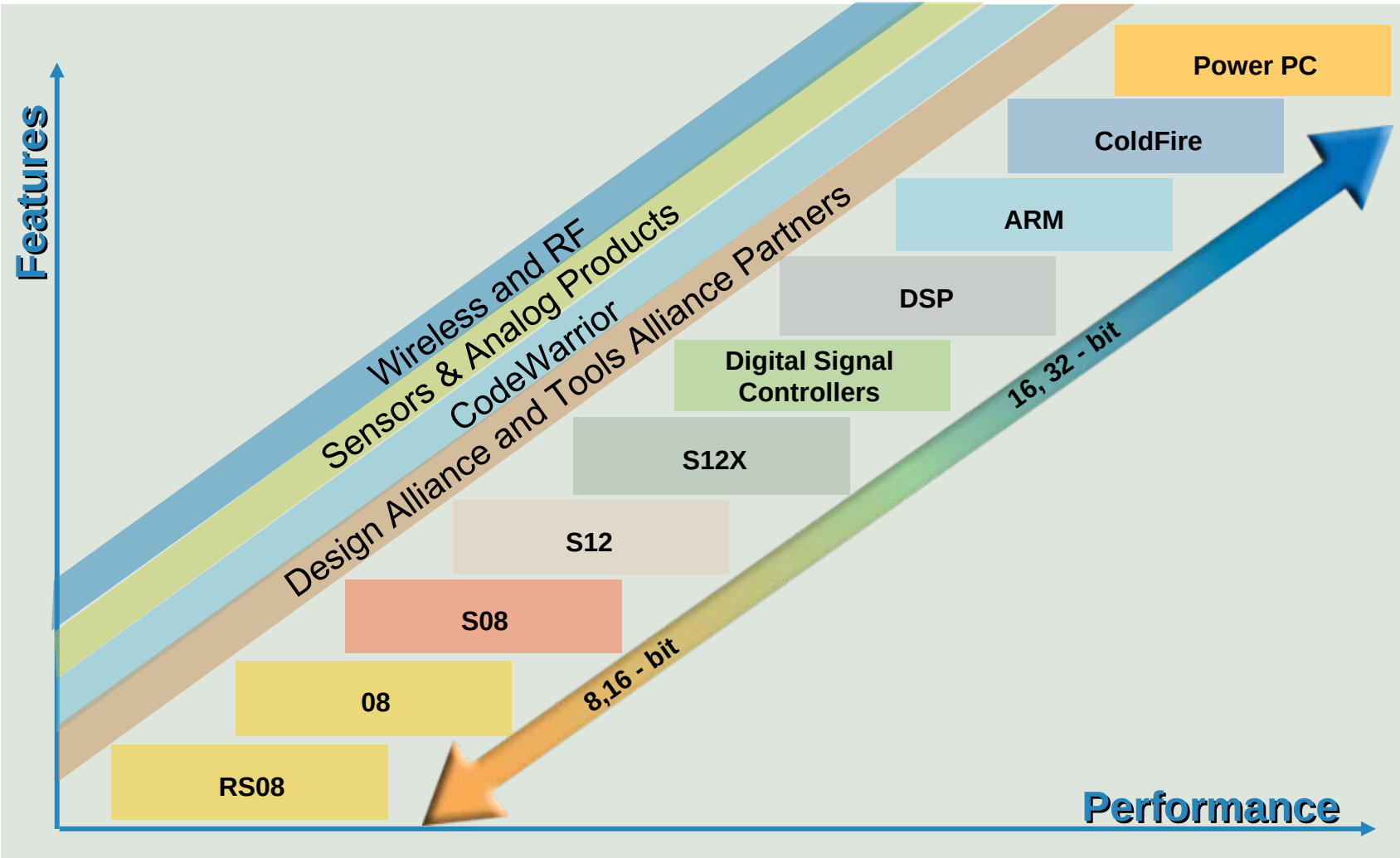

Freescale™ and the Freescale logo are trademarks of Freescale Semiconductor, Inc. All other product or service names are the property of their respective owners. © Freescale Semiconductor, Inc. 2006.

freescale™ semiconductor

8-bit to 32-bit Controller Continuum

Freescale™ and the Freescale logo are trademarks of Freescale Semiconductor, Inc. All other product or service names are the property of their respective owners. © Freescale Semiconductor, Inc. 2006.

freescale™ semiconductor

Microcontroller Landscape Is Changing

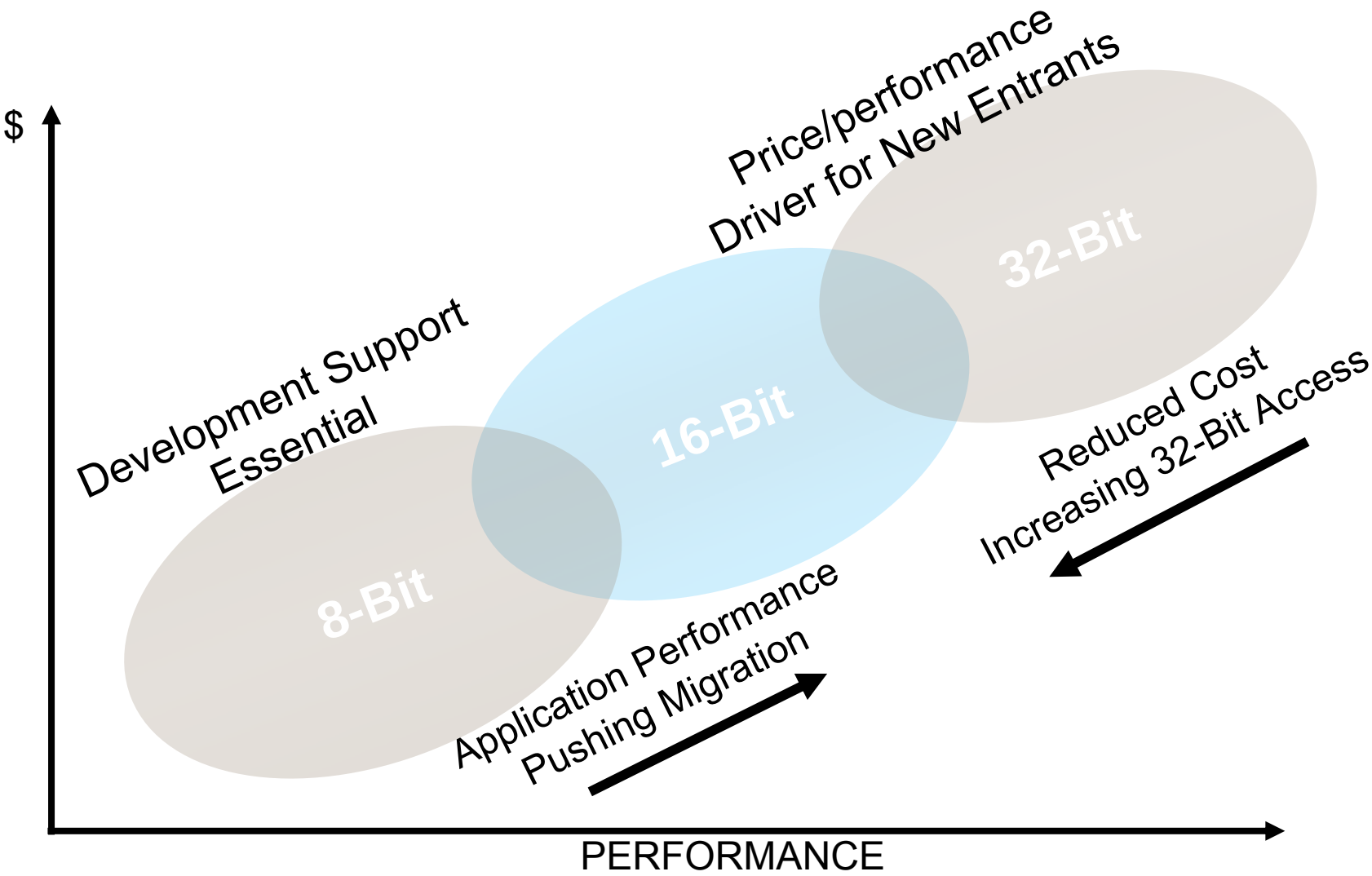

Freescale™ and the Freescale logo are trademarks of Freescale Semiconductor, Inc. All other product or service names are the property of their respective owners. © Freescale Semiconductor, Inc. 2006.

freescale™ semiconductor

Freescale MCU Portfolio Positioned for Growth

$

Reinforcing Low-End 8-bit

- 9S08QG delivers more for less
- RS08KA2 targets the sub 50¢ level
- CodeWarrior® 5.0 sets new bar for ease-of-use

16-bit Targeting Special Applications

- S12 and S12X showing strong growth in automotive
- Digital signal controllers delivering motor control solutions

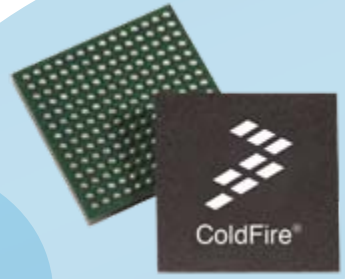

Adding Muscle to ColdFire®

Control – Connectivity – Security

- First 32-bit MCUs for single-chip Ethernet and USB-OTG
- 32-bit performance at 16-bit price widens entry point

PERFORMANCE

Freescale™ and the Freescale logo are trademarks of Freescale Semiconductor, Inc. All other product or service names are the property of their respective owners. © Freescale Semiconductor, Inc. 2006.

freescale™ semiconductor

32-bit Performance Becoming More Accessible

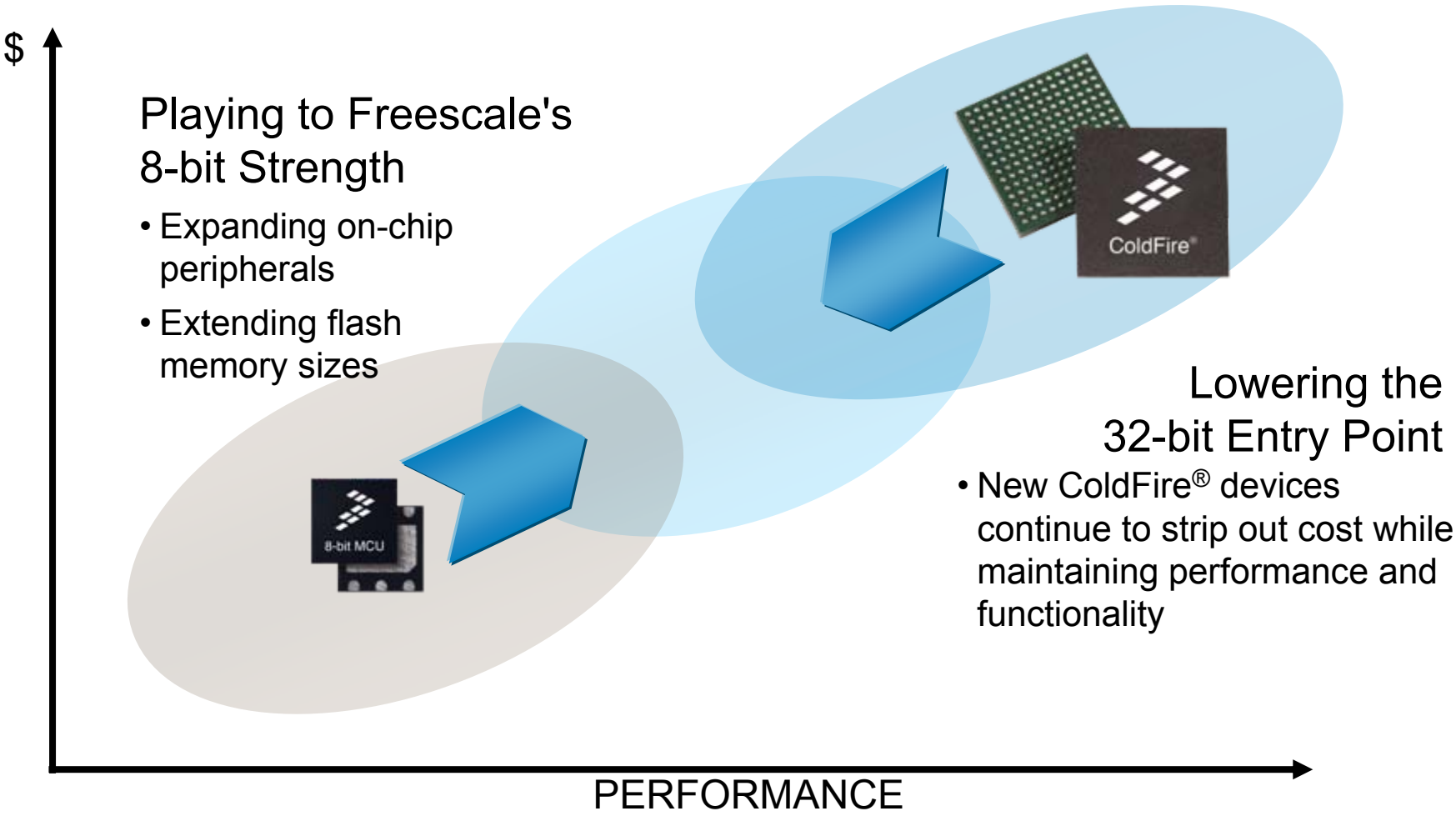

Freescale™ and the Freescale logo are trademarks of Freescale Semiconductor, Inc. All other product or service names are the property of their respective owners. © Freescale Semiconductor, Inc. 2006.

freescale™ semiconductor

ColdFire® V1: Controller Continuum Missing Link

Industry's First 8/32-bit Compatible Architectures

- 32-bit performance with 8-bit ease of use
- Peripheral set and pin compatibility
- New version of CodeWarrior® development tool to support both S08 and ColdFire® V1 architectures

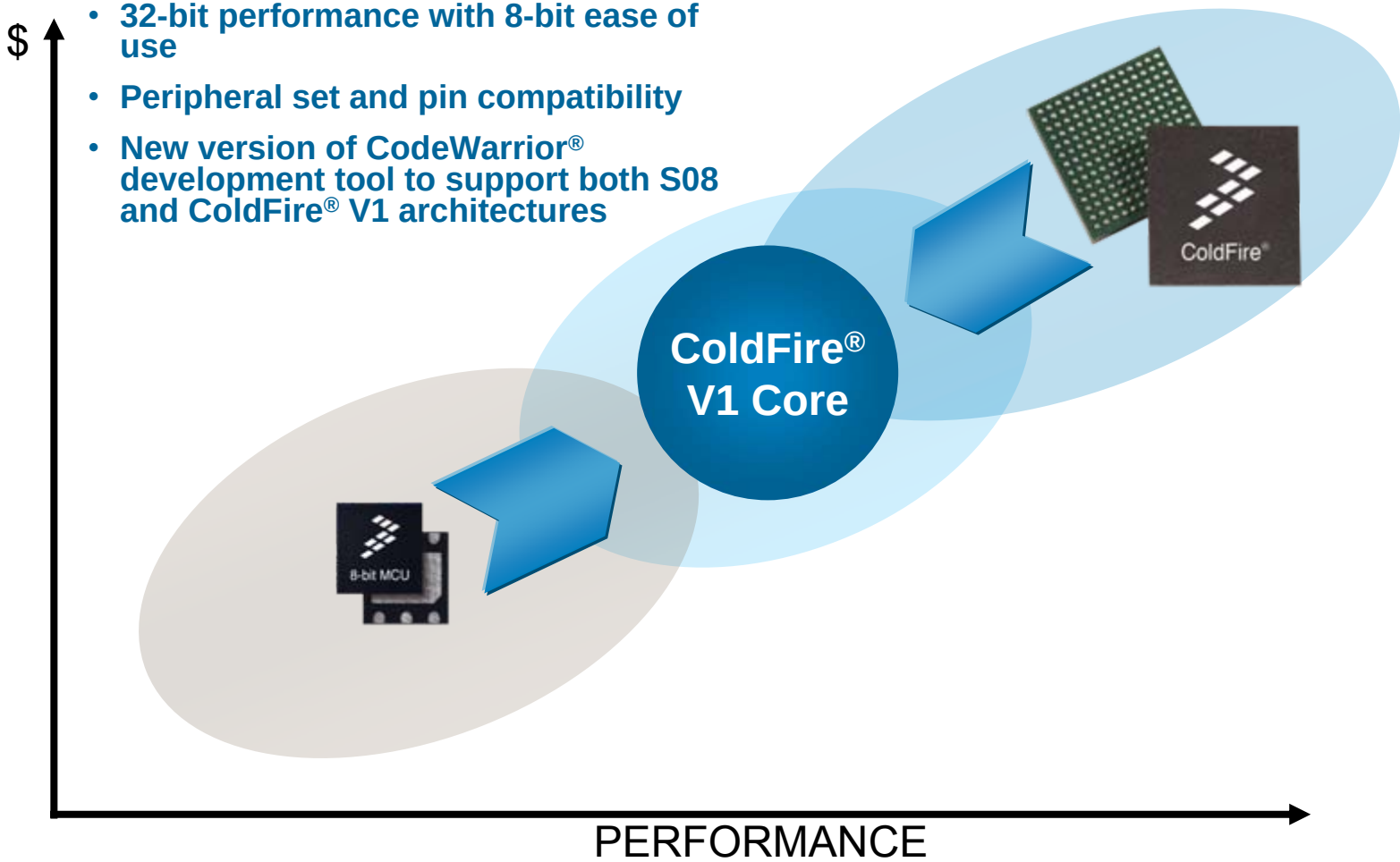

Freescale™ and the Freescale logo are trademarks of Freescale Semiconductor, Inc. All other product or service names are the property of their respective owners. © Freescale Semiconductor, Inc. 2006.

freescale™ semiconductor

Freescale 8-Bit MCUs in Consumer and Industrial

Global Leadership

- Freescale a leading supplier of 8-Bit MCUs to the consumer and industrial market.

Portfolio

- Broadest portfolio & still expanding with innovative, cost-effective, and easy to use products for a wide range of 8-bit applications.
  - include HCS08, HC08, and RS08

Long-term Presence

- We know Consumer and Industrial requirements.
  - We've been delivering since 1950s

Services and Support

- Freescale is partnered and supported by leading global providers of software tools, emulators, compilers, drivers and services.

Performance

- Freescale's Consumer and Industrial MCUs are high performance
  - Our technology is improving battery life in portable devices and making home entertainment, appliances, and PC peripherals more intelligent, reliable, and connected.

Cost Effective

- Freescale's MCUs are cost competitive.

Freescale™ and the Freescale logo are trademarks of Freescale Semiconductor, Inc. All other product or service names are the property of their respective owners. © Freescale Semiconductor, Inc. 2006.

freescale™ semiconductor

Freescale's 8-bit Cores

▶ The HC08 Core

- *Industry workhorse* with an impressive array of peripherals – analog, timers, communications protocols (CAN, LIN, RF, USB), & communication modules in SPI, SCI (UART), IIC
- Designed for programming in C – efficient, modular coding
- Strong memory protection features in COP, LVI, POR
- .50µ technology

▶ The HCS08 Core

- Optimized for *extreme operating economy* – multiple stop modes, along with wait & standby
- Designed for programming in C – efficient, modular coding
- High performance up to 50 MHz CPU, 25 MHz Bus
- Utilizes .25µ 3rd generation embedded Flash technology
- Outstanding memory security and protection features including POR, LVI,
- On-chip In-circuit emulation and background debug mode

▶ The RS08 Core

- Designed specifically for small pin-count, low memory devices
- Efficient and cost-effective for *ultra low-end applications* – 30% smaller than HCS08

Note: HC08, HCS08, & RS08 are all code compatible to Freescale legacy HC05 core.

Freescale™ and the Freescale logo are trademarks of Freescale Semiconductor, Inc. All other product or service names are the property of their respective owners. © Freescale Semiconductor, Inc. 2006.

freescale™ semiconductor

8-Bit Family Portfolio & Roadmap

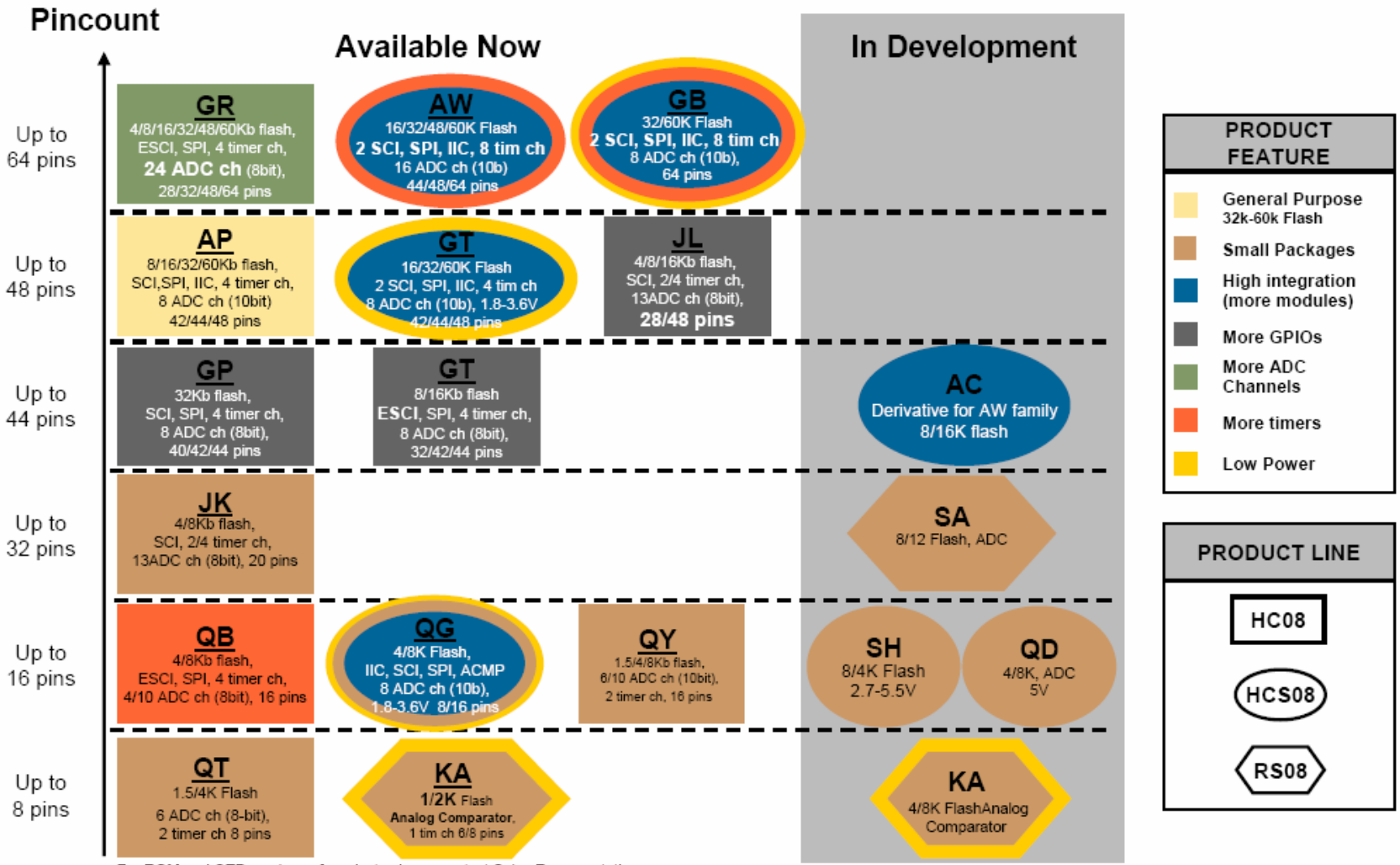

For ROM and OTP versions of products please contact Sales Representative

Freescale™ and the Freescale logo are trademarks of Freescale Semiconductor, Inc. All other product or service names are the property of their respective owners. © Freescale Semiconductor, Inc. 2006.

freescale™ semiconductor

Freescale's Expanding 8-bit Portfolio
New Products in 2006

MC9S08AW60	60K, 32K, 16K flash options, 5V General Purpose
MC908LV8	Low-end LCD
MC908JL16	Upward expansion to existing JL Family
MC9RS08KA	Introduction of RS08 core, ultra-low end
MC08LT8	Low-end remote control
MC908EY16A	Next generation to existing EY Family
MC9S08GBxxA	Next generation to existing GB family
MC9S08GTxxA	Next generation to existing GT Family – adds 8K option and more RAM at low end
MC9S08QD4	5V general purpose
MC908JR12	Integrated 27 MHz RF

Freescale™ and the Freescale logo are trademarks of Freescale Semiconductor, Inc. All other product or service names are the property of their respective owners. © Freescale Semiconductor, Inc. 2006.

freescale™ semiconductor

Products–General Purpose

High Integration/General Purpose	
MC9S08GB –1.8V to 3.3V operation **MC9S08GT – Smaller packages and fewer timers than GB.**	Communications and low voltage functionality for use in a wide range of general purpose applications. Often used in combination with Zigbee™ technologies.
MC9S08AW – 2.7V to 5.5V operation	High end functionality ideally suited for large appliances, motor control, automotive applications.
High Resolution Analog	
908AP	Mid-range appliance devices
908GR	High Resolution analog with 24 channel ADC
Mid-range pin count	
MC908JL/JK **MC908QC** **MC908QB**	Mid-range I/O and memory in small footprint with analog resolution, timers, and communications for motor control, small appliances, industrial control

Freescale™ and the Freescale logo are trademarks of Freescale Semiconductor, Inc. All other product or service names are the property of their respective owners. © Freescale Semiconductor, Inc. 2006.

freescale™ semiconductor

Small Package Devices

Most new designs use the RS08/S08 devices.

MC9RS08KA	Lowest end MCU, based on RS08 (1.8V to 5.5V)
MC9S08QG	Highly integrated, 1.8V to 3.3V compatible with MC9RS08KA
MC9S08QD	2.7V to 5.5V upwardly compatible from MC9RS08KA

MC908Q family devices provide solid functionality in a variety of low pin count packages

MC908QT	Base Q device with 8-pin packages – 10-bit ADC
MC908QY	Based Q devices 16-pin packages – 10-bit ADC
MC908QB	Larger memory sizes, more ADC channels (10), more timer channels, SCI, and SPI
MC908QC	Larger memory (up to 16K Flash), 2nd independent timer, larger pin count options (up to 28 pins)

Freescale™ and the Freescale logo are trademarks of Freescale Semiconductor, Inc. All other product or service names are the property of their respective owners. © Freescale Semiconductor, Inc. 2006.

freescale™ semiconductor

MC9RS08KA

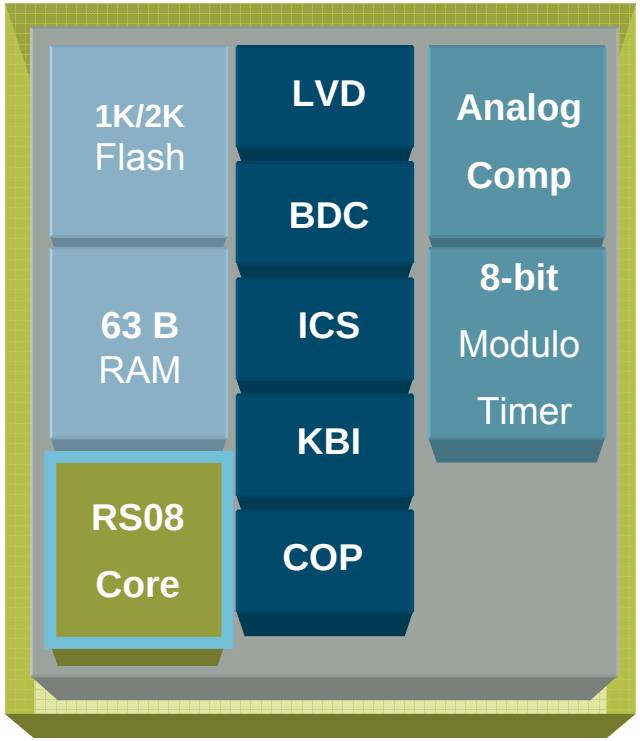

MC9RS08KA2
MC9RS08KA1

- **Supply Voltage / Performance**
  - *1.8-5.5V*
- **Core**
  - *RS08 Core*
- **Memory**
  - *1K / 2K Flash*
  - *63 B RAM*
- **Analog Comparator**
  - *Full rail-to-rail supply operation*
  - *Can operate in STOP mode*
- **Features/ Benefits**
  - *Integrated Clock Source (ICS) up to 10MHz internal bus operation with 2% deviation over full temperature and voltage range*
  - *Computer operating properly feature (COP)*
  - *8-bit Modulo Timer, Auto wakeup*
  - *3 / 5 channel keyboard interrupt (KBI)*
  - *LVD (low voltage detect) with reset or stop wakeup*
  - *External Vpp required for Flash programming*
- **Fast Track Development Tools**
  - *DEMO9RS08KA2 and Fast Track CodeWarrior v5.1*
- **Packaging**
  - *6 pin DFN, 8 pin NB-SOIC, 8 pin PDIP*
- **Target Applications:**
  - *Small appliance, toys, simple analog comparator / simple logic replacement, HB-LED*

Freescale™ and the Freescale logo are trademarks of Freescale Semiconductor, Inc. All other product or service names are the property of their respective owners. © Freescale Semiconductor, Inc. 2006.

freescale™ semiconductor

9S08QD4

(Low Cost, 8pin, S08)

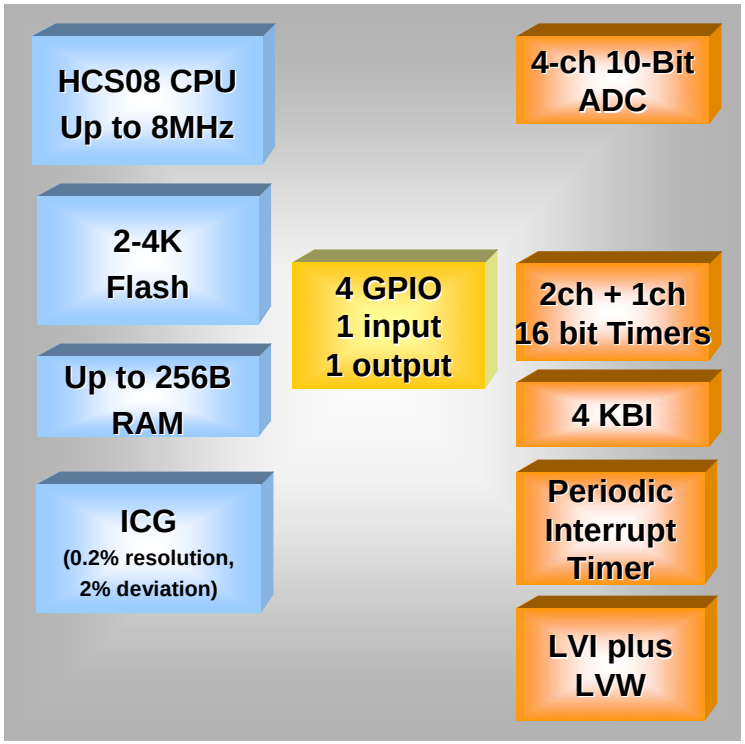

8 pin SOIC narrow body, 8 pin PDIP
MC9S08QD4CSC …. $0.69/1kpcs

Key Features/Benefits

- **Supply Voltage/ Performance**
  - 4MHz bus @3.0 V ±10%, 8MHz bus @5.0 V ±10%, -40 to 105C
- **Core**
  - *S08 Core*
- **Memory**
  - *2-4K FLASH, 256 RAM*
- **Features/ Benefits**
  - Precision trimming Internal Clock Source provide 0.2% resolution with 2% deviation for full operating temperature and voltage
  - 1 one-channel and 1 two-channel 16-bit Timer with selectable IC, OC, or PWM
  - Computer Operating Properly and LVI with selectable trip point
  - 4 ch, 10-bit Analog to Digital Converter
  - 4 x Keyboard Interrupts
  - Port : 4GPIO, 1 output, 1 input. Slew rate selection is available for all output pins.
  - COP
- **Available Packages**
  - 8 pin SOIC narrow body, 8 pin PDIP
  - Pin compatible to 9S08QG8/4 & 9RS08KA2 (8-pin)
- **Development Tools/ Documentation**
  - H/W: Standard MMEVS, MMDS
  - S/W: The existing CodeWarrior tool suite
- **Target Applications:**
  - DC Fan, CDI, general purpose

Freescale™ and the Freescale logo are trademarks of Freescale Semiconductor, Inc. All other product or service names are the property of their respective owners. © Freescale Semiconductor, Inc. 2006.

freescale™ semiconductor

MC9S08QG8 / QG4

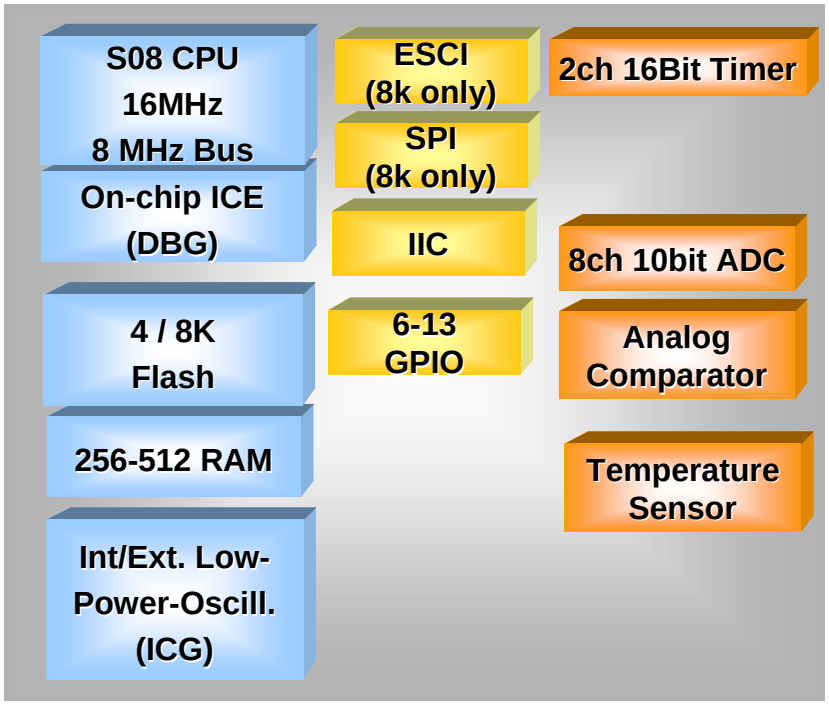

16 pin QFN, TSSOP, PDIP
8 pin DFN, SOIC, PDIP
MC9S08QG4CPAE …. $0.89/1kpcs

Key Features/Benefits

Supply Voltage
- 1.8V – 3.6V, -40C to +125 C

Core
- 16MHz HCS08 Core/ 8MHz Bus Frequency

Memory
- 4kB - 8kB Flash/ 256B - 512B RAM

Communications
- ESCI, SPI, IIC

Features/ Benefits
- 8MHz Internal @ 1.8V – 3.6V
- Flash Read/Write @ 1.8V
- Internal Osc (2% Precision over temperature & frequency)
- On-chip ICE (DBG)
- Background Debug Controller (BDC)
- 2-ch, 16-bit, IC/ OC, or PWM
- COP, 10-bit ADC, ICS with FLL, LVI, RTI
- Up to 13 GPIO
- Power Saving Modes
- On-chip temperature Sensor
- Pincompatibility to 9S08QD4 & 9RS08KA2 (8-pin)

Available Packages
- 16-pin SOIC/TSSOP/PDIP
- 8-pin DFN/SOIC/PDIP

Target Applications:
- Electronic power meters, Sensors, Wireless comm.
- Home appliances, Security systems, etc…

Freescale™ and the Freescale logo are trademarks of Freescale Semiconductor, Inc. All other product or service names are the property of their respective owners. © Freescale Semiconductor, Inc. 2006.

freescale™ semiconductor

KA2 Anti-Crash Robot

The KA2 Anti-Crash Robot is a toy robot that moves by itself and is able to avoid obstacles changing its direction when it approaches an object

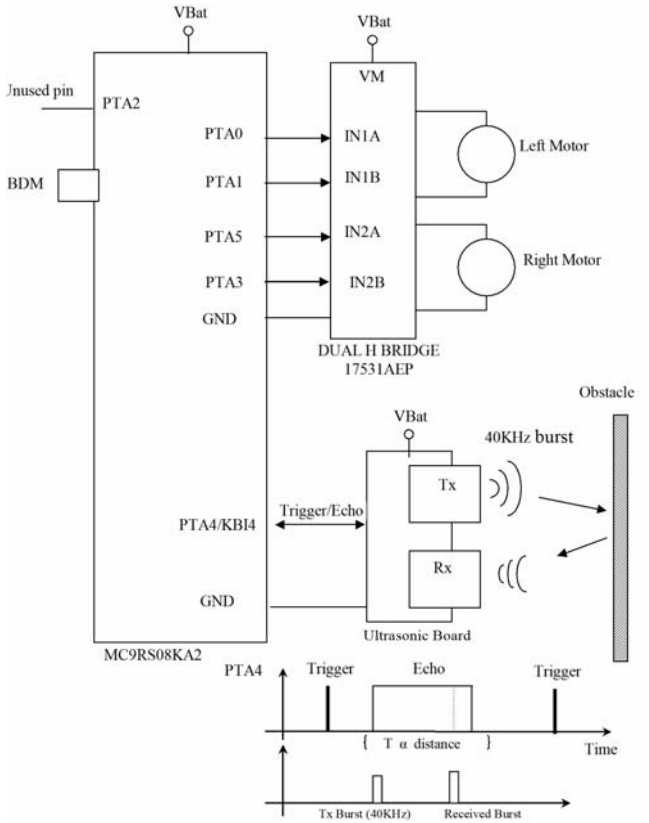

	MC9RS08KA2	KA2 Robot
I/O	6	5
Flash	2K	439 Bytes
RAM	64 bytes	9 bytes
Analog Comparator	1	-
KBI	5	1
Bus Clock	Up to 10 MHz	8MHz
MTIM	1	1
RTI	1	1
Package	8 SOIC 6 DFN 8DIP	8 SOIC

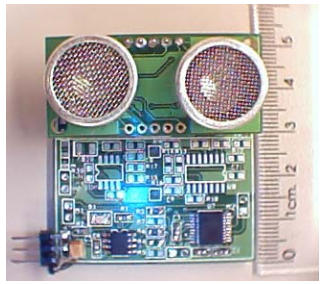

Other applications:

- Distance measurement can be used in an ultrasonic automotive backup warning system.
- Small handheld devices

Freescale™ and the Freescale logo are trademarks of Freescale Semiconductor, Inc. All other product or service names are the property of their respective owners. © Freescale Semiconductor, Inc. 2006.

MC9S08AW60/32/16 – Feature Set

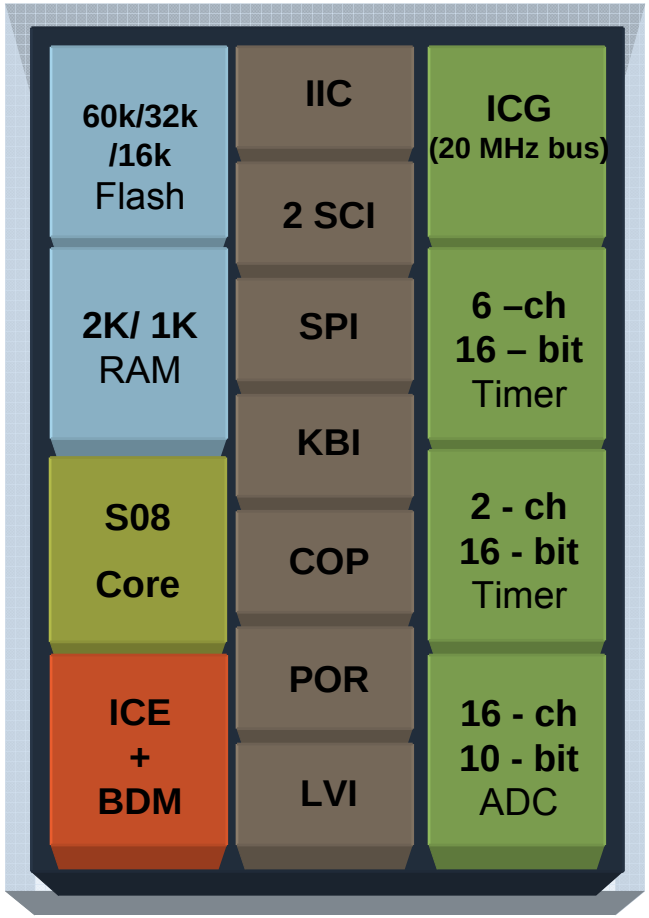

1K Unit MSRP:

MC9S08AW60 $5.83
MC9S08AW32 $4.62
MC9S08AW16 $4.07

Features

►Memory
- 16 - 64 k Flash, capable of EEPROM emulation
- 1k – 2k bytes of RAM

►Internal Clock Generator (ICG)
- Up to 20 MHz bus
- FLL with 8 software selectable multipliers
- On-chip oscillator – Requires no external components
- Bus clock divider with 8 software selectable settings
- Separate self-clocked source for real time interrupt
- 0.5% typical. 2% accuracy over full operating range

►Serial Communication
- IIC (synchronous), SPI (synchronous), and 2 SCI (asynchronous)

►Timers
- 6 - channel Timer/PWM Module (TPM)
- 2 - channel Timer/PWM Module (TPM)

►Analog Modules
- 16 - ch, 10 - bit Analog-to-digital converter
- Enhanced LVD

►Development Tools
- On chip ICE and BDM

►Available Packages- 64 QFP, 64 LQFP, 48 QFN, 44 LQFP

Freescale™ and the Freescale logo are trademarks of Freescale Semiconductor, Inc. All other product or service names are the property of their respective owners. © Freescale Semiconductor, Inc. 2006.

freescale™ semiconductor

MC9S08AWxx Target Applications

- ▶Home Appliance
- ▶Kitchen Appliance
- ▶Automotive
- ▶LIN Applications
- ▶Industrial control
- ▶Security system
- ▶Lighting control

Many other general market applications

OUR CUSTOMERS' IMAGINATION IS THE ONLY LIMIT!

Freescale™ and the Freescale logo are trademarks of Freescale Semiconductor, Inc. All other product or service names are the property of their respective owners. © Freescale Semiconductor, Inc. 2006.

freescale™ semiconductor

Sensorless BLDC Motor Control using MC9S08AW60

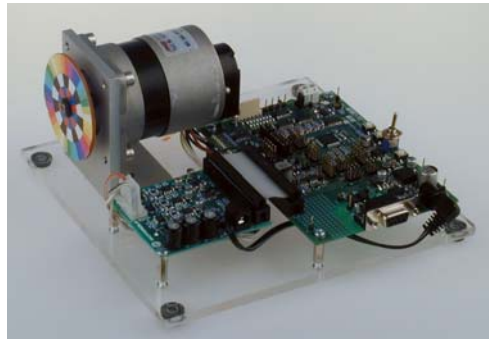

►Application Diagram

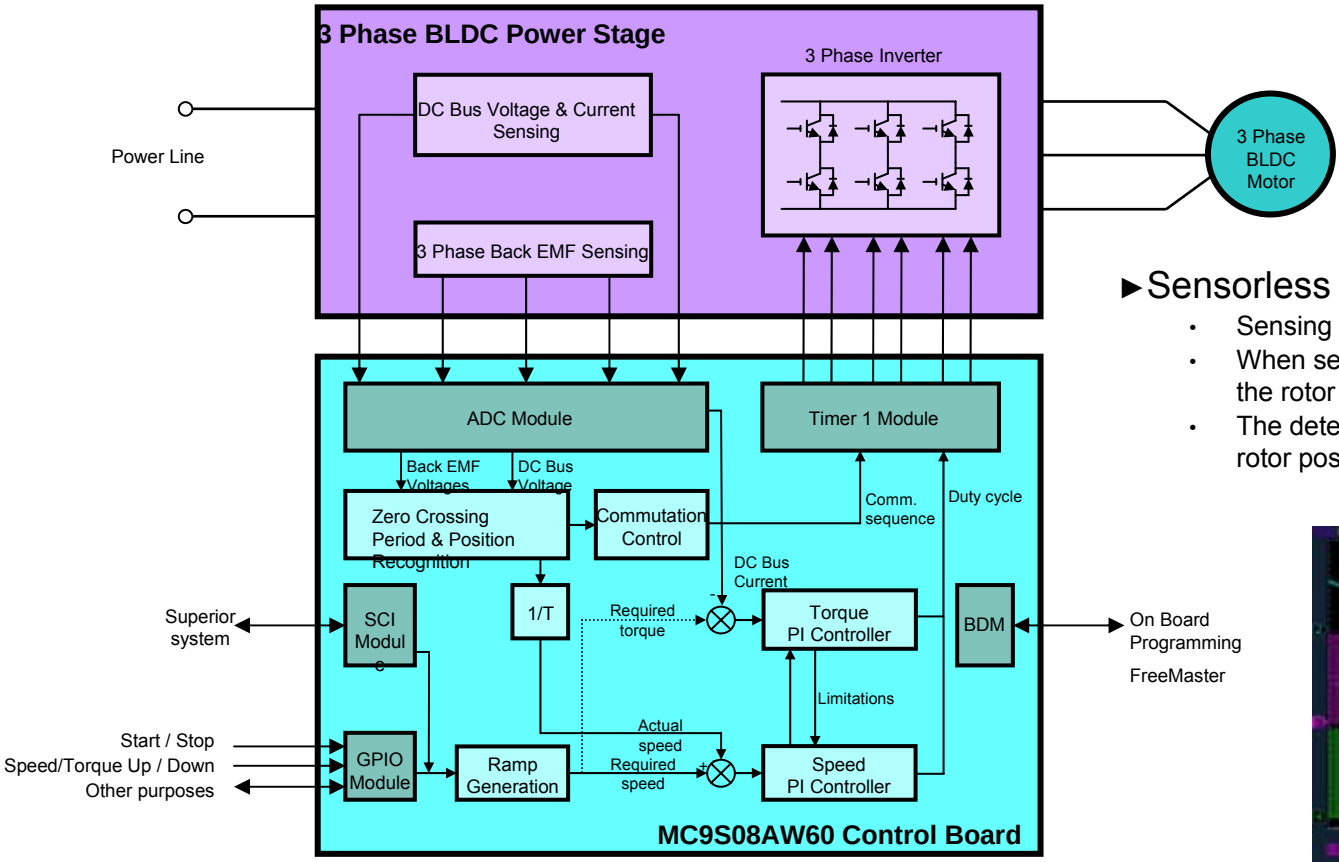

►Sensorless Back-EMF zero cross algorithm

- Sensing voltage on disconnected phase
- When sensed voltage crosses half of DC bus voltage, the rotor is in middle between two commutation
- The detection of this zero crossing allows to detect rotor position

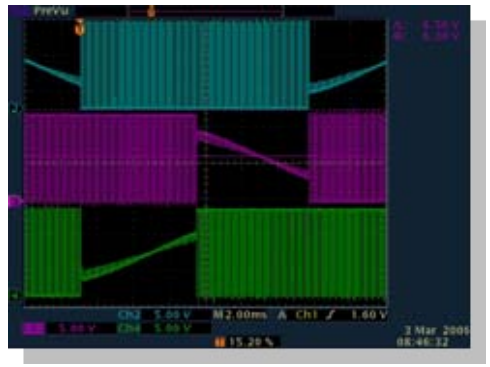

Freescale™ and the Freescale logo are trademarks of Freescale Semiconductor, Inc. All other product or service names are the property of their respective owners. © Freescale Semiconductor, Inc. 2006.

freescale™ semiconductor

MC9S08LC60

- **Features / Benefits**
  - Supports LCD
    - 3 and 5 V glass
  - LCD Segment Offerings
    - 4/3 x 32/33
    - 4/3 x 40/41
    - 4/3 x 42/43
  - Enhanced EEPROM emulation
  - Internal clock generation (ICG)
    - FLL generates 8 MHz to 40 MHz
    - Up to 20 MHz bus rates
    - IRG: Two controlled clock sources
    - Option of external RC, external clock, crystal or resonator or trimmable internally generated clock
    - Configurable two timer/pulse-width modulators for PWM
- **Supply Voltage / Performance**
  - 1.8 – 3.6 V operation
  - -40 to 85°C operation
- **Core**
  - 40 MHz HCS08 core
  - 20 MHz bus frequency
- **Memory**
  - 60K Flash, 4K RAM
- **Communications**
  - SCI, two SPI modules, IIC bus module up to 100 kbps
  - 12-bit ADC w/ internal reference voltage
- **Packages**
  - 18 to 24 LQFP, 80 LQFP

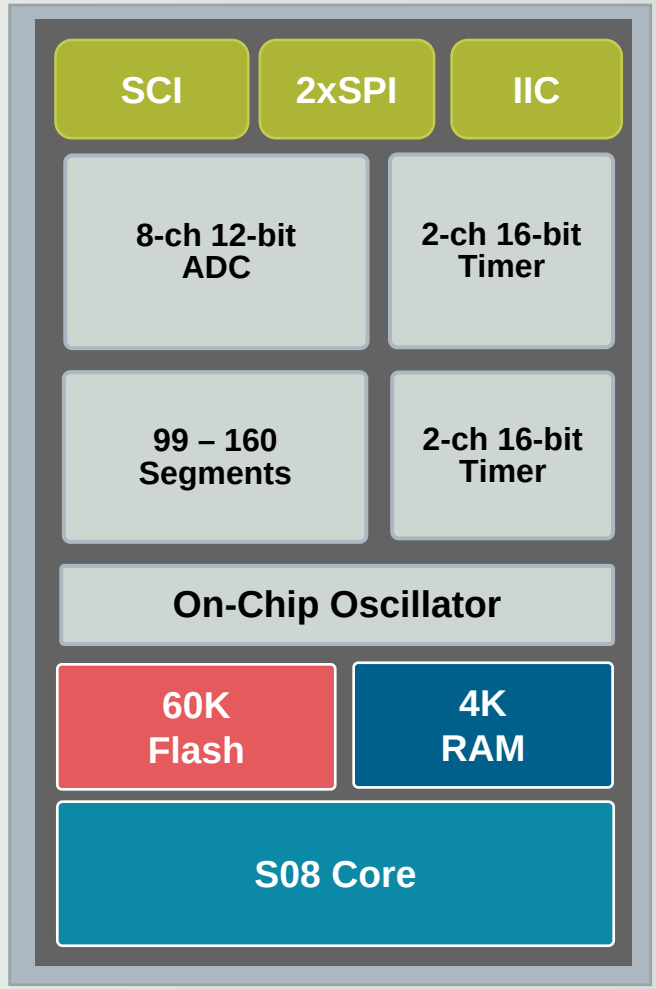

Last updated February 19, 2007

Freescale™ and the Freescale logo are trademarks of Freescale Semiconductor, Inc. All other product or service names are the property of their respective owners. © Freescale Semiconductor, Inc. 2006.

freescale™ semiconductor

Market Focused Devices

- **Remote Control**
  - MC9S08RG
  - MC9S08RE
  - MC9S08RD
  - MC9RS08KA
  - MC08LT
- **USB**
  - MCHC908JW – USB 2.0 Full-speed
  - MC908JB - USB 1.1
- **LCD**
  - MC908LJ – 4 x 32 LCD
  - MC908LV – 4 x 24 LCD
  - MC9S08LC - 4 x 40 segment-based LCD New

- MC9S08R Family devices include a Carrier Module Timer specifically for remote control devices (see AN3053)
- Reference design available for low-end remote control on the MC9RS08KA (see DRM081)

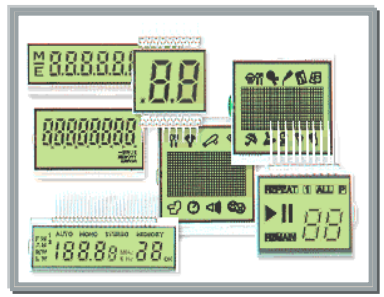

Freescale™ and the Freescale logo are trademarks of Freescale Semiconductor, Inc. All other product or service names are the property of their respective owners. © Freescale Semiconductor, Inc. 2006.

freescale™ semiconductor

Industrial Communications

- **CAN**
  - MC908AS
  - MC908AZ
  - MC908GZ
  - MC9S08DZ/DV New
- **LIN (*Local Interconnect Network*)**
  - MC908EY
  - MC908QL-incorporate the SLIC module
  - MC908GR
- **Integrated RF**
  - MC908RF
  - MC9S08JR

- CAN protocol use is expanding rapidly into factory automation, industrial machine control, measurement systems, and building controls.

LOCAL INTERCONNECT NETWORK

Freescale™ and the Freescale logo are trademarks of Freescale Semiconductor, Inc. All other product or service names are the property of their respective owners. © Freescale Semiconductor, Inc. 2006.

freescale™ semiconductor

Fast Track CodeWarrior v5.1 Tools

- ***Fast, Easy, Simple*** - Fast Track
- CodeWarrior v5.1 tools ***remove the complication*** of using powerful software

- CodeWarrior is an intricate advantage to using Freescale's 8-bit products
  - Create projects based on your needs—simple projects (e.g. absolute assembly)
    to complex multi-developer projects
  - Keep the ***focus on the value-added*** portion of the application (initialization code and drivers are configured and automatically generated for your application)
  - ***Speed!*** Keep projects on time and on budget to meet the end-application market window (e.g. port your application to a larger and/or newer derivative with a few clicks)

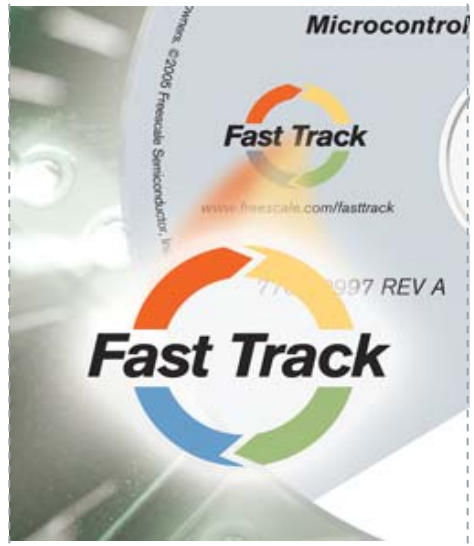

Freescale™ and the Freescale logo are trademarks of Freescale Semiconductor, Inc. All other product or service names are the property of their respective owners. © Freescale Semiconductor, Inc. 2006.

freescale™ semiconductor

Design Tools - Hardware

▶ Demonstration Board – MSRP $25 to $75

- Basic user I/O functions to test application code
- Most MCU pins are available via I/O headers for easy expandability
- CodeWarrior™ Special Edition included
- Most recent boards include USB-to-BDM connection on the board (No need for USBMULTILINKBDM)

▶ Evaluation Board – MSRP $75 to $250

- Prototyping area for custom interfacing
- Selectable MCU modes of operation

▶ Cyclone Pro – MSRP $495

- Real-time, in-circuit flash programmer and debugger
- USB, Serial, and Ethernet programmer and debugger

▶ USB Multilink – MSRP $99

- Multilink cable handles the proper powering sequences and programming / debugging routines.

▶ In-Circuit Emulator (FSICE) – MSRP starts at $1495

- Cost effective programming
- Device-specific emulation module
- Device-specific target cable
- For HC08 only – HCS08 has on-chip ICE& RS08 has on-chip background debugging

Freescale™ and the Freescale logo are trademarks of Freescale Semiconductor, Inc. All other product or service names are the property of their respective owners. © Freescale Semiconductor, Inc. 2006.

freescale™ semiconductor

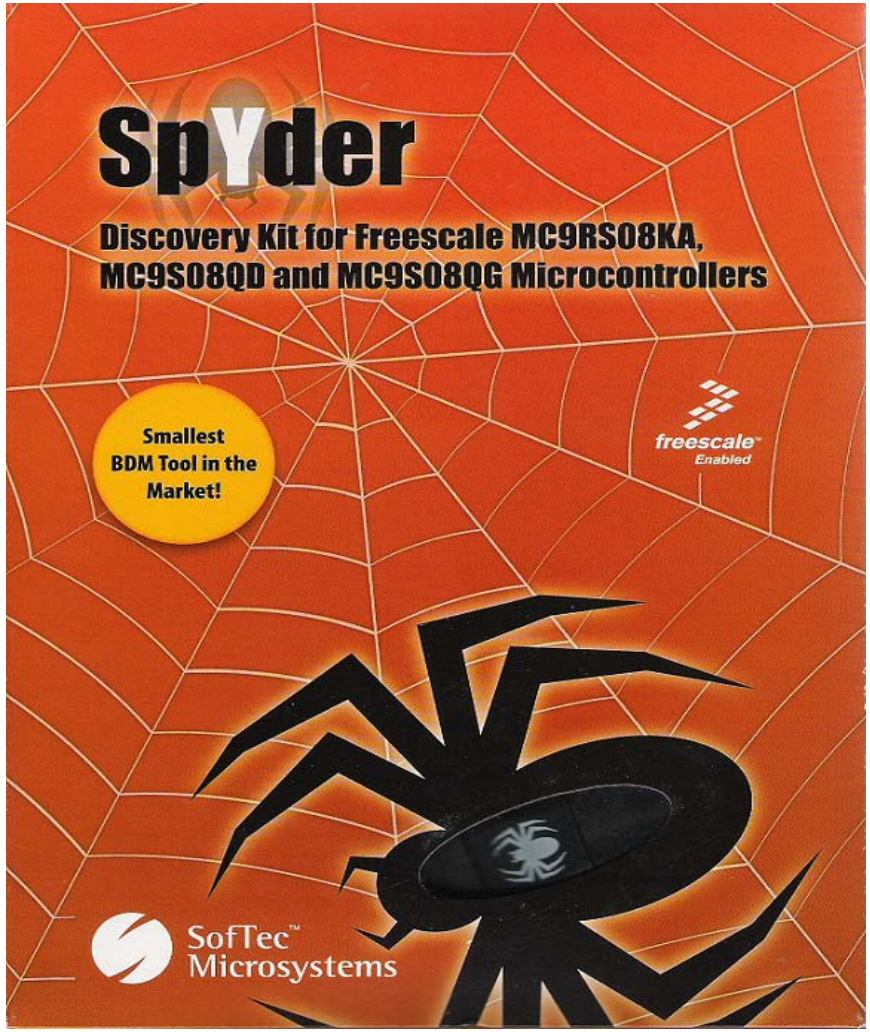

Freescale™ and the Freescale logo are trademarks of Freescale Semiconductor, Inc. All other product or service names are the property of their respective owners. © Freescale Semiconductor, Inc. 2006.

freescale™ semiconductor

Freescale™ and the Freescale logo are trademarks of Freescale Semiconductor, Inc. All other product or service names are the property of their respective owners. © Freescale Semiconductor, Inc. 2006.

freescale™ semiconductor

Spyder - Smallest BDM tools in the market

1) USB Connection:
USB Device Connector for connection to host PC; Full Speed USB Standard A Device Connector

2) Target Device:
Initial tool will be populated with socketed S08QG8 (8pin PDIP). Can be swapped out for any 8pin PDIP (R)S08 device.

Dimensions ≈ 25 mm x 15 mm x 75 mm

3) Header Pins:
A provision for a header connector with all of the microcontroller signals bonded out (8signals).

4) 6pin BDM Connector & Cable:
Allows connection to target application boards for (R)S08KA2, QD, QG devices not in 8pin PDIP Package.

Freescale™ and the Freescale logo are trademarks of Freescale Semiconductor, Inc. All other product or service names are the property of their respective owners. © Freescale Semiconductor, Inc. 2006.

freescale™ semiconductor

Benefits of using the On-Chip Real-Time ICE with HCS08

- Reduces interconnect by putting ICE inside
  - Capture buffers, comparators, and logic are becoming much smaller than bonding pads
  - Full access and debug even in very tight spaces
- Eliminates timing, loading, and drive issues
  - Target IS the actual MCU not just an emulated equivalent
  - Capture buffer and logic are the same as the target MCU so no marginal timing
- Emulate at full target speed and with all target circuitry including crystal components
- No issues with temperature or voltage
- Eliminates expensive external emulator box and interconnect

Freescale™ and the Freescale logo are trademarks of Freescale Semiconductor, Inc. All other product or service names are the property of their respective owners. © Freescale Semiconductor, Inc. 2006.

freescale™ semiconductor

Broad Third Party Tool Partners

- Compilers
  - Avocet Systems, BP Micro, Bytecraft, Cosmic, IAR, Imagecraft, TASKING
- Emulators/BDM
  - iSYSTEMS, Lauterbach, Noral, P&E Micro, SofTec
- Eval Boards
  - Axiom, Avnet, Future, Beta Control, Dipl. Ing., Elektronikladen, Hitex, New Micros, Oztechnics P/L, Prometero S.r.l., Softec, Technological Arts
- RTOS & Misc Debug/Simulation
  - Metrowerks, Avocet, CMX, Cosmic, PE Micro, NOICE
- Gang Programmers
  - BP Micro, Data I/O, Lloyd Research, Promik, System General Corporation, Xeltek

Freescale™ and the Freescale logo are trademarks of Freescale Semiconductor, Inc. All other product or service names are the property of their respective owners. © Freescale Semiconductor, Inc. 2006.

freescale™ semiconductor

ZigBee

Freescale™ and the Freescale logo are trademarks of Freescale Semiconductor, Inc. All other product or service names are the property of their respective owners. © Freescale Semiconductor, Inc. 2006.

Short Range Wireless Technologies

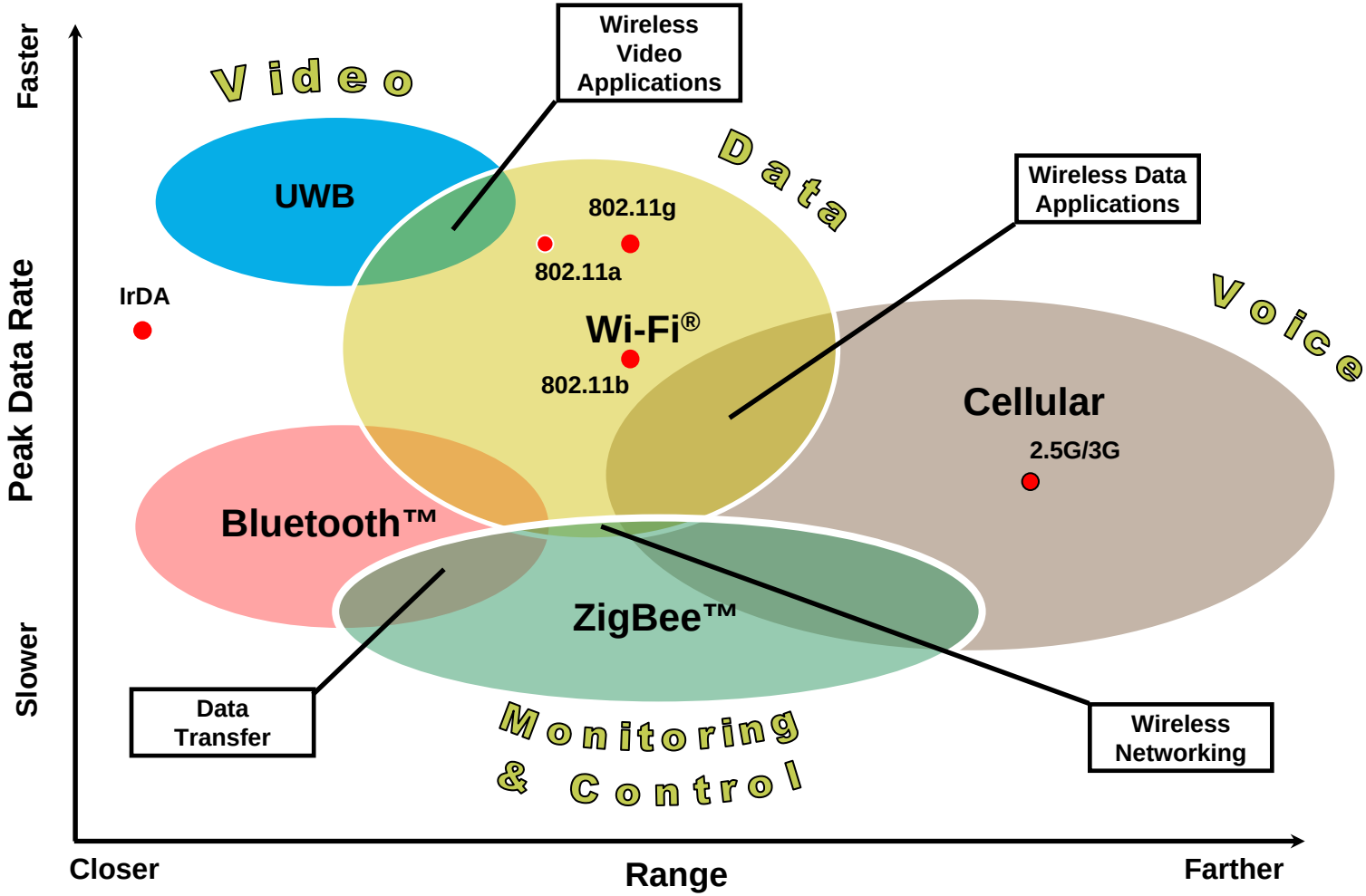

Freescale™ and the Freescale logo are trademarks of Freescale Semiconductor, Inc. All other product or service names are the property of their respective owners. © Freescale Semiconductor, Inc. 2006.

freescale™ semiconductor

Wireless Standards Compared

Feature(s)	IEEE 802.11b Wi-Fi	IEEE 802.15.3 Bluetooth	IEEE 802.15.4 ZigBee
Power Profile	Hours	Days	Years
Complexity	Very Complex	Complex	Simple
Nodes/Master	32	7	64000
Latency	Enumeration upto 3 seconds	Enumeration upto 10 seconds	Enumeration 30ms
Range	100 m	10m	70m-300m
Extendability	Roaming possible	No	YES
Data Rate	11Mbps	1Mbps	250Kbps
Security	Authentication Service Set ID (SSID)	64 bit, 128 bit	128 bit AES and Application Layer user defined

Freescale™ and the Freescale logo are trademarks of Freescale Semiconductor, Inc. All other product or service names are the property of their respective owners. © Freescale Semiconductor, Inc. 2006.

freescale™ semiconductor

What is ZigBee?

ZigBee Value Propositions

- Addresses the unique needs of most remote monitoring and control network applications
  - Infrequent, low rate data
- Enables the broad-based deployment of wireless networks with low cost & low power solutions
  - Supports peer-to-peer, star and mesh networks
- Supports applications with low-power requirements
  - Months to Years of Battery Life
- Provides a business environment that supports deployment of these applications
  - Profiles for Interoperability
  - Reduced Cost of Entry compared with other Wireless standards

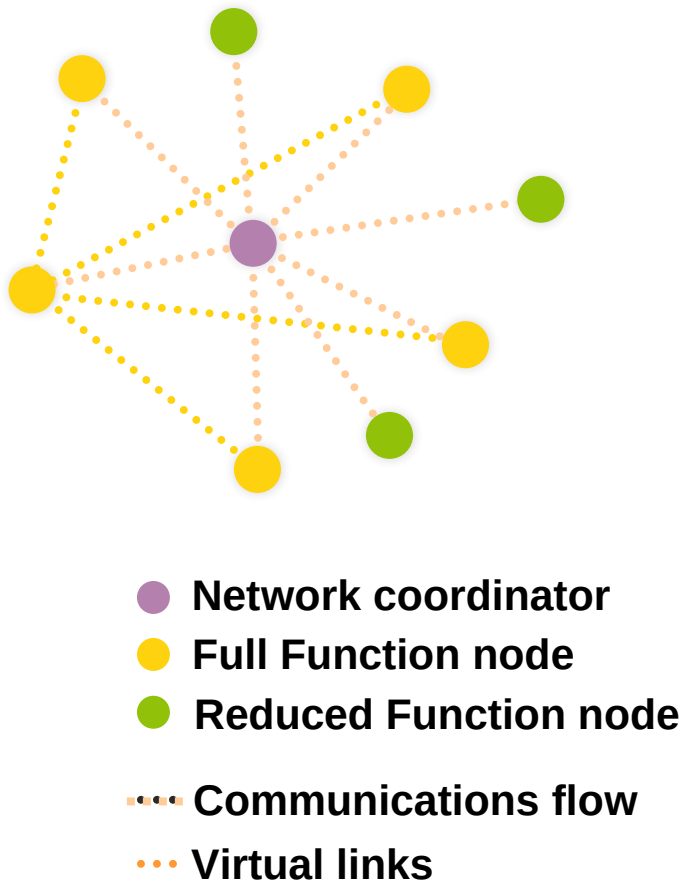

Freescale™ and the Freescale logo are trademarks of Freescale Semiconductor, Inc. All other product or service names are the property of their respective owners. © Freescale Semiconductor, Inc. 2006.

freescale™ semiconductor

ZigBee network Topologies

- ►Addressing
  - All devices have 64-bit addresses
  - Short 16-bit addresses can be allocated
  - Addressing modes:
    - Network + device identifier (star)
    - Source/destination identifier (peer-peer)
- ►Two channel access mechanisms
  - Beacon-enabled network
  - Non-beacon network
- ►Three levels of security specified by ZigBee profile
  - None
  - Access control lists
  - Symmetric key employing AES-128

MESH NETWORK
Application Example – **Hotel system**
- Central hub at front desk **(PAN co-ordinator)**
- Can remotely configure power, temperature,etc **(FFD)**
- Door entry via rf card - **RFD**

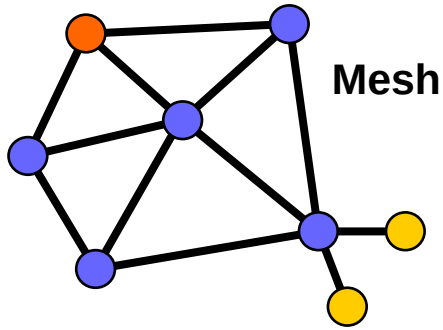

CLUSTERTREE
Similar applications to mesh network,
- **Application Example – Smart Building System**
  - Heating, lighting, security systems on same cluster tree network
  - All networks pass thru central node

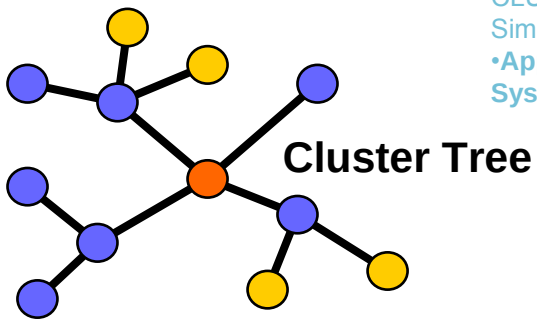

NWK Topology Models

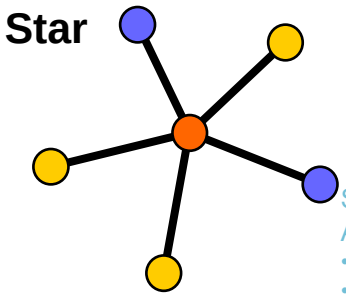

STAR NETWORK
Application Example – Home Burglar Alarm
- Main Control Box – **PAN Co-ordinator**
- Sensors, PIR Detectors, siren – **RFD**
- Remote dial-in - **FFD**

Full Function Device (FFD)
- Any topology
- Network coordinator capable
- Talks to any other device

Reduced Function Device (RFD)
- Limited to star topology
- Cannot become a network coordinator
- Talks only to a network coordinator

Freescale™ and the Freescale logo are trademarks of Freescale Semiconductor, Inc. All other product or service names are the property of their respective owners. © Freescale Semiconductor, Inc. 2006.

freescale™ semiconductor

ZigBee Solutions – Hardware

Freescale™ and the Freescale logo are trademarks of Freescale Semiconductor, Inc. All other product or service names are the property of their respective owners. © Freescale Semiconductor, Inc. 2006.

MC1320X Overview

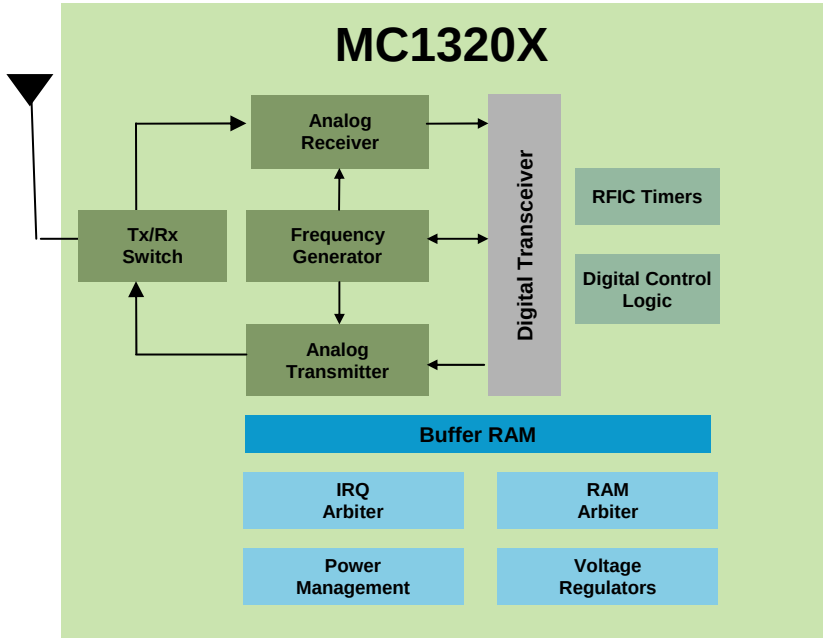

- ►Software compatible to the MC1319X
  - Proprietary Applications using SMAC
  - IEEE® 802.15.4 Compliant Modem
  - ZigBee Compliant Platform
  - Millennial Net Meshscape
- ►Availability
  - In production

Overview	2.4 GHz Transceiver with integrated Tx/Rx switch
RF Component Count (No Controller)	9 external components: 6 caps, 1 inductor, 1 balun, 1 crystal
Network Support	Point-to-Point, Star, Cluster Tree and Mesh
Connection to controller	4-wire SPI
Low Power Modes	Off, Hibernate (1mA), Doze (3mA), and Idle (40mA)
Sensitivity	Up to -92 dBm
Power Output	-27 dBm to +4 dBm
GPIO	7
Operating Voltage	2.0 to 3.4 V
Operating Temp	-40º to +85ºC
Package	5x5x1 mm 32-pin QFN (Meets RoHS requirements)

Freescale™ and the Freescale logo are trademarks of Freescale Semiconductor, Inc. All other product or service names are the property of their respective owners. © Freescale Semiconductor, Inc. 2006.

freescale™ semiconductor

MC1320X Transceiver Family

	MC13201	MC13202	MC13203
Overview	Low cost 2.4 GHz transceiver for proprietary applications	IEEE 802.15.4 Compliant 2.4 GHz transceiver	ZigBee-Ready 2.4 GHz transceiver
	Buffered transmit and receive data packets for use with low cost MCUs		
	Low component count reduces complexity and cost		
	Programmable clock output available to MCU		
Network Topology	Point-to-Point and Star	Peer-to-Peer, Star and Mesh	
Software	Simple MAC (SMAC)	IEEE 802.15.4 MAC or non-F8W ZigBee Stack	F8W ZigBee Stack
Transfer Mode	Packet	Packet and Streaming	
Throughput	250 Kbps, O-QPSK Modulation, DSSS Energy Spreading Scheme		
Tx/Rx Switch	Integrated on-chip		
Low Power Modes	Off, Hibernate (1μA), Doze (3μA), and Idle (40μA)		
Sensitivity	-91 dBm	-92 dBm	
Power Supply	2.0 to 3.4 V		
MCU Support	8-bit MCU, ColdFire, S12, DSC	HCS08, ColdFire (Feb.)	HCS08, ColdFire (Sept.)
MCU Interface	SPI Interface to MCU		
Power Output	-27 dBm to +4 dBm (software selectable)		
Operating Temp	-40º to +85ºC Operating Temperature		
Package	5x5x1 mm 32-pin QFN (Meets RoHS requirements)		
10K SRP USD	$2.35	$2.75	$3.28

Freescale™ and the Freescale logo are trademarks of Freescale Semiconductor, Inc. All other product or service names are the property of their respective owners. © Freescale Semiconductor, Inc. 2006.

freescale™ semiconductor

MC1321X Overview

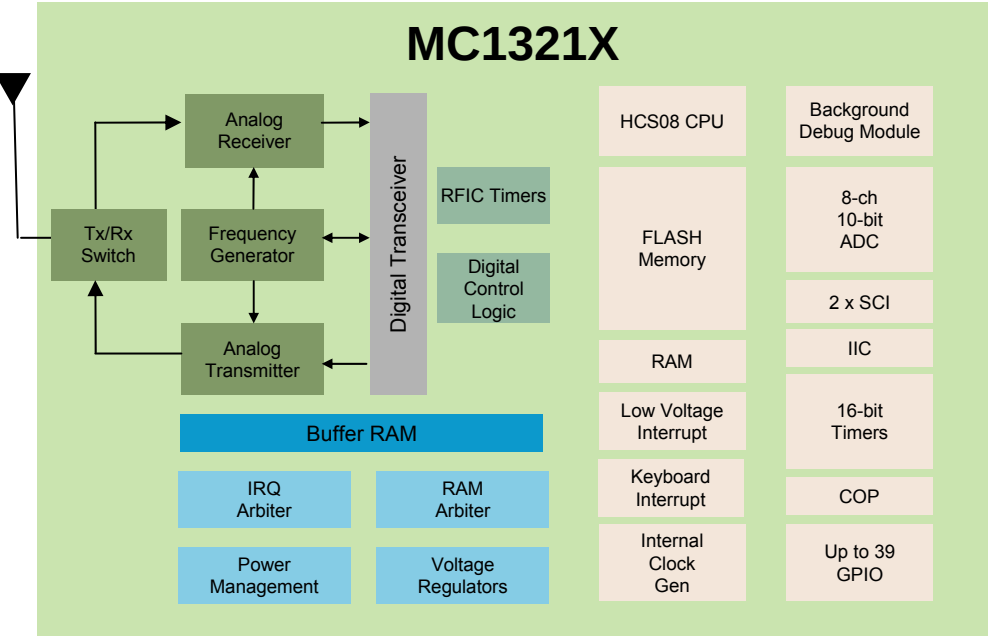

- ►Software compatible to the MC1319X
  - Proprietary Applications using SMAC
  - IEEE® 802.15.4 Compliant Modem
  - ZigBee Compliant Platform
  - Millennial Net Meshscape
- ►Availability
  - In production

Overview	**2nd Generation ZigBee platform with 2.4 GHz Transceiver and MC9S08GT Family 8-bit MCU**
Component Count	**10 external components: 7 caps, 1 inductor, 1 balun, 1 crystal**
Network Support	**Point-to-Point, Star, Cluster Tree and Mesh**
Sensitivity	**-92 dBm**
Power Output	**-27 dBm to +4 dBm**
Memory	**Up to 60 KB FLASH, 4 KB RAM**
Low Power Modes	**4-RF (Off, Hibernate, Doze, Idle) and 4-MCU (Run, Wait, STOP2, STOP3)**
I/O	**Up to 39 GPIO, 8-channel 10-bit ADC, 9 Timers, 2 SCI, IIC, LVI, ICG, COP**
Operating Volt.	**2.0 to 3.4 V**
Operating Temp	**-40º to +85ºC**
Package	**9x9x1 mm 64-pin LGA Meets RoHS requirements**

Freescale™ and the Freescale logo are trademarks of Freescale Semiconductor, Inc. All other product or service names are the property of their respective owners. © Freescale Semiconductor, Inc. 2006.

freescale™ semiconductor

MC1321X SiP Family

	MC13211	MC13212	MC13213/214
Overview	2.4 GHz Transceiver with Integrated GT16 MCU	IEEE 802.15.4 Compliant 2.4 GHz Transceiver with Integrated GT32 MCU	ZigBee-ready 2.4 GHz Transceiver with Integrated GT60 MCU
	Integrated 2.4 GHz Transceiver with Tx/Rx switch and HCS08 GT Family MCU		
	Low power modes for months to years of battery powered applications		
	Ultra low component count reduces complexity and cost		
Network Topology	Point-to-Point and Star	Peer-to-Peer, Star and Mesh	
Software	Simple MAC (SMAC)	IEEE 802.15.4 MAC or non-F8W ZigBee Stack	F8W ZigBee Stack
Transfer Mode	Packet and Streaming		
Throughput	250 Kbps, O-QPSK Modulation, DSSS Energy Spreading Scheme		
Low Power Modes	4-RF (Off, Hibernate, Doze, Idle) and 4-MCU (Wait, STOP1, STOP2, STOP3)		
Sensitivity	-92 dBm		
Operating Voltage	2.0 to 3.4 V		
FLASH Memory	16 KB FLASH, 1 KB RAM	32 KB FLASH, 2 KB RAM	60 KB FLASH, 4 KB RAM
I/O	Up to 39 GPIO, 8-channel 10-bit ADC, 4 Timers, 2 SCI, IIC, LVI, ICG, COP		
Power Output	-27 dBm to +4 dBm (software selectable)		
Operating Temp	-40º to +85ºC Operating Temperature		
Package	9x9x1 mm 64-pin LGA (Meets RoHS requirements)		
Minimum CodeWarrior Version	CodeWarrior 16KB Special Edition	CodeWarrior 32K SE Upgrade	CodeWarrior 64K SE Upgrade
10K SRP USD	$3.61	$3.94	$4.32 / $4.85

Freescale™ and the Freescale logo are trademarks of Freescale Semiconductor, Inc. All other product or service names are the property of their respective owners. © Freescale Semiconductor, Inc. 2006.

freescale™ semiconductor

ZigBee Family Comparison

	MC13192	MC13202	MC13213
Package Size	25 mm^2 5x5x1 mm	25 mm^2 5x5x1 mm	81 mm^2 9x9x1 mm
8-bit MC9S08GT60 Package Size	49 mm^2 7x7x1 mm	49 mm^2 7x7x1 mm	Internal
Platform External Part Count for 50ohm Single-Ended Output (antenna not included)	17 (includes MCU & bypass cap)	11 (Includes MCU & bypass cap)	10 (includes bypass cap)
Integrated Tx/Rx Switch	No	Yes	Yes
Sensitivity	-92 dBm	-92 dBm	-92 dBm
Total Solution Size (antenna not included)	300 mm^2	250 mm^2	200 mm^2
Silicon Cost (2006 10K SRP USD)	$6.10	$6.28	$4.32
External Component Cost USD (antenna not included)	$1.06	$0.77	$0.77

Freescale™ and the Freescale logo are trademarks of Freescale Semiconductor, Inc. All other product or service names are the property of their respective owners. © Freescale Semiconductor, Inc. 2006.

freescale™ semiconductor

Freescale™ and the Freescale logo are trademarks of Freescale Semiconductor, Inc. All other product or service names are the property of their respective owners. © Freescale Semiconductor, Inc. 2006.

freescale™ semiconductor

MC1322x -single-chip ZigBee® Platform in Package™

- **Ultra-low-power consumption**
  - Onboard buck converter for ultra-low-power applications
- **TurboLink technology delivering up to 10X data**
  - Switch automatically between the IEEE 802.15.4 protocol and TurboLink
- **MC1322x PiP solution features**
  - IEEE 802.15.4 transceiver
  - 32-bit processor capable of running up to 26 MHz
  - **All RF tuning components and balun are contained within the MC1322x package,**
  - Hardware accelerator and security
  - Dual 12-bit analog-to-digital converters
  - Multiple serial ports and peripherals
  - Onboard ROM, containing device drivers and a fully compliant IEEE 802.15.4 MAC
  - RAM and flash memory for cost-sensitive wireless applications
- Availability: **4Q 2007**

Freescale™ and the Freescale logo are trademarks of Freescale Semiconductor, Inc. All other product or service names are the property of their respective owners. © Freescale Semiconductor, Inc. 2006.

freescale™ semiconductor

ZigBee Solutions – Software

Freescale™ and the Freescale logo are trademarks of Freescale Semiconductor, Inc. All other product or service names are the property of their respective owners. © Freescale Semiconductor, Inc. 2006.

freescale™ semiconductor

Multi-Offering Approach with 802.15.4 / ZigBee

Simple Wireless Connectivity

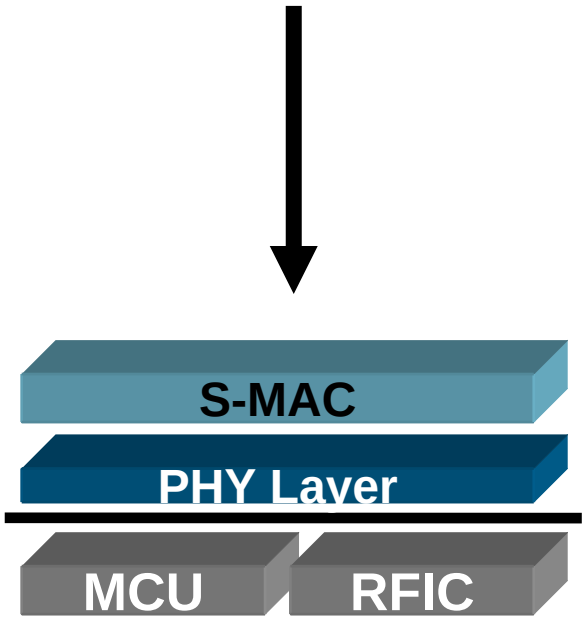

802.15.4 Solution

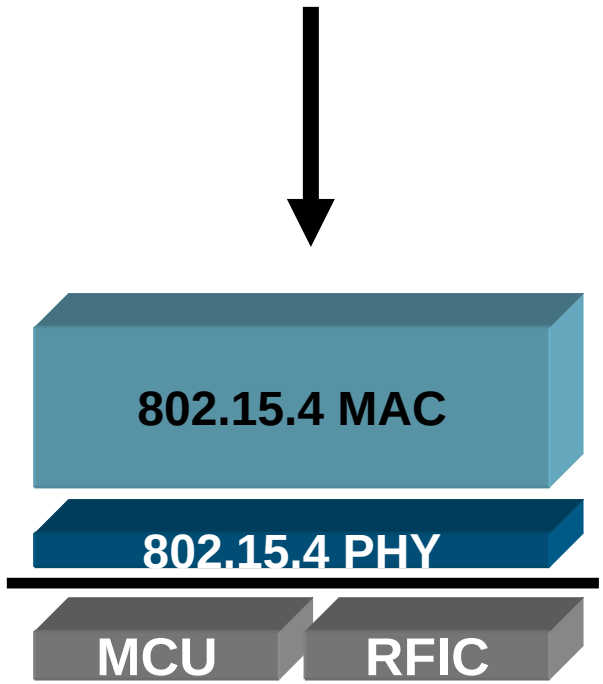

ZigBee

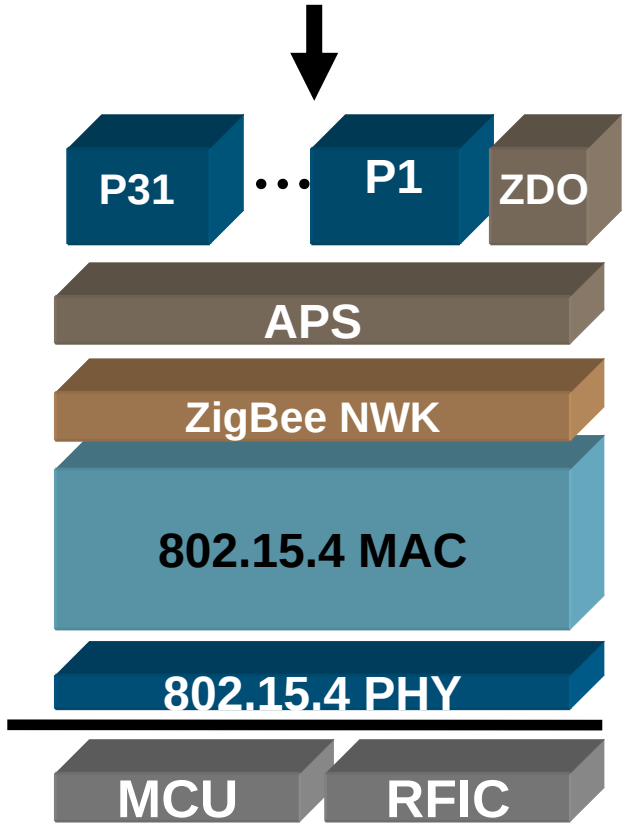

Freescale™ and the Freescale logo are trademarks of Freescale Semiconductor, Inc. All other product or service names are the property of their respective owners. © Freescale Semiconductor, Inc. 2006.

freescale™ semiconductor

Proprietary Solutions (SMAC)

Simple Wireless Connectivity

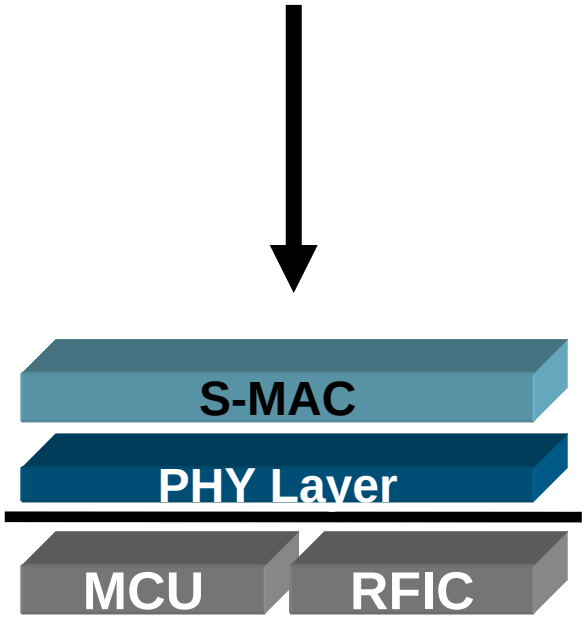

- Features Highlights
- **Portfolio's Lowest Cost Solution**
- **Ease of Use**
  - **Uses Simple Media Access Controller Software (SMAC)**
  - **Only 16 Primitives**
  - **Requires Less than 2.5K bytes of Memory**
  - **ANSI C Source Code Provided**
- **Flexibility**
  - **Generic SPI Targets any MCU**
  - **Provides Migration Path to ZigBee**

- Target Applications
- **Point to Point and Star Networks**
- **Ultra Low Power Requirements**
- **Ultra Low Memory Requirements**

- **Processors supported**
  - **HCS08, HC12, DSC, ColdFire**

Freescale™ and the Freescale logo are trademarks of Freescale Semiconductor, Inc. All other product or service names are the property of their respective owners. © Freescale Semiconductor, Inc. 2006.

freescale™ semiconductor

IEEE 802.15.4 Standard-Based Proprietary

Hardware Features

►802.15.4 PHY Compliant
- MC13192/3 Transceiver
- Supports Packet and Streaming Mode
- Compliant to all RF Specs

►Targets the HCS08GT60

Target Applications

•Mesh/Clustertree NWKs
•Robust Communication and Timing Critical Protocol
•NWK Standard not needed
•Interoperability not needed

802.15.4 Solution

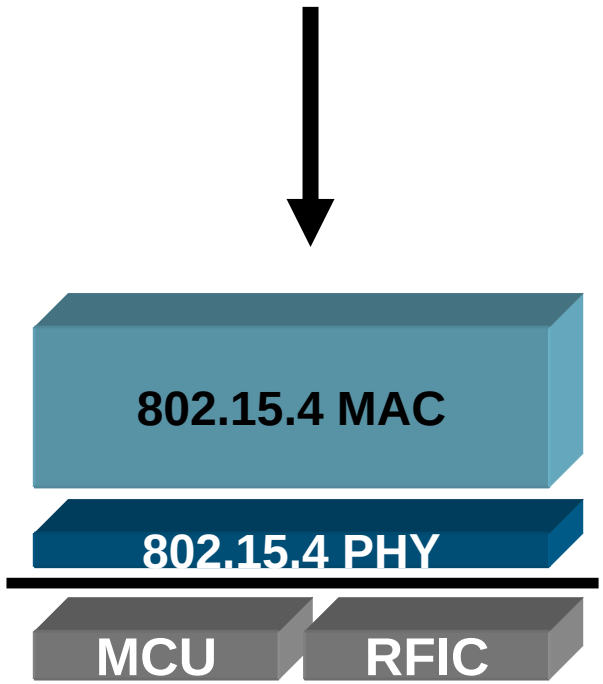

Software Features

►802.15.4 MAC Compliant
- Standardized Communication Protocol
- Supports Beaconed and Non-Beaconed NWKs
- GTS, 128 AES Encryption
- Co-existence Mitigation Algorithm CSMA-CA
- Mesh & Clustertree NWKs

►Option to Remove Unnecessary Features to reduce code size

►Provided in Object Code

Processors Supported

►HCS08, ColdFire (Feb/Mar)

Freescale™ and the Freescale logo are trademarks of Freescale Semiconductor, Inc. All other product or service names are the property of their respective owners. © Freescale Semiconductor, Inc. 2006.

freescale™ semiconductor

Fully Compliant ZigBee

Features Highlights

- ZigBee Compliant Platform
- Complete Wireless Networking Standard – from Antenna to API
- Wireless Embedded or Dongle Options

Target Applications

- Mesh & Clustertree NWKs
- Established Routing Algorithm
- Network Recovery and Healing
- Device Interoperability

Processors Supported

- HCS08, ColdFire (Sep/Oct)

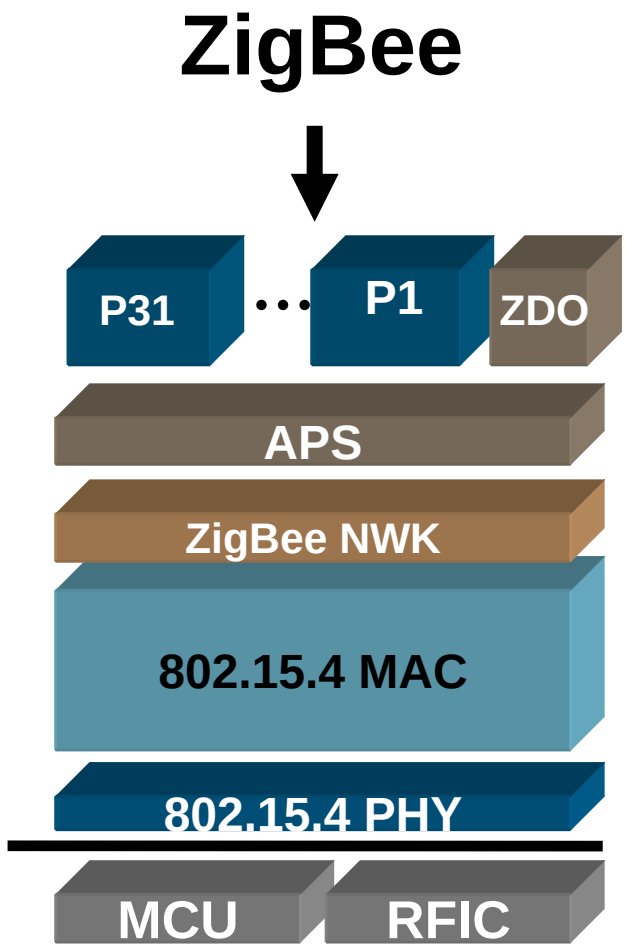

Freescale™ and the Freescale logo are trademarks of Freescale Semiconductor, Inc. All other product or service names are the property of their respective owners. © Freescale Semiconductor, Inc. 2006.

freescale™ semiconductor

BeeKit / BeeStack

(Run a ZigBee network in less than 30 minutes)

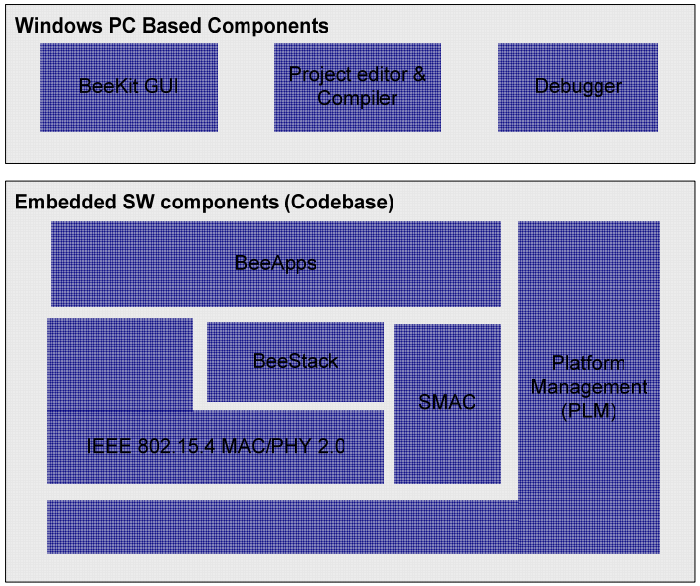

Product Summary & Differentiators

- Computer-based development environment for proprietary, 802.15.4 and ZigBee applications.
- Supports all available development boards (DSKs, NSKs, EVKs)
- User-defined hardware target function.
- Applications are decoupled from the stack implementation. Allows for easy code updates and promotes code reuse.
- Downloadable free of charge on website
- ZigBee-2006 certified BeeStack

Target Applications

- Remote Keyless Entry
- Home Automation (HVAC, Lighting)
- Garage door opener
- Remote Metering
- RF Data Transfer
- Building Automation (Access Control)
- Industrial Control (Asset Monitoring)
- Automotive Keyless Remote

Milestone	Availability & Ordering
BeeKit	Available for download on website Burnt on a CDROM with devkits in March 2007
BeeStack	March 2007
Launch	March 2007
SRP	BeeKit (SMAC, 15.4 codebases) : FREE BeeStack (90-day license) : FREE BeeStack Standard License : $995 (BEESTK-S08-STD) BeeStack Floating License : $1495 (BEESTK-S08-FLT)

Freescale™ and the Freescale logo are trademarks of Freescale Semiconductor, Inc. All other product or service names are the property of their respective owners. © Freescale Semiconductor, Inc. 2006.

freescale™ semiconductor

BeeKit defined:

- Comprehensive code base of wireless networking libraries, application templates, and sample applications
- Graphical user interface (GUI) for the creation, modification and updating of wireless networking implementations
- Automated validation of configuration parameters
- Generation of workspace files to be imported into an integrated development environment (IDE) for continued development and debugging through xml
- Easily scalable to support new code bases and functionality

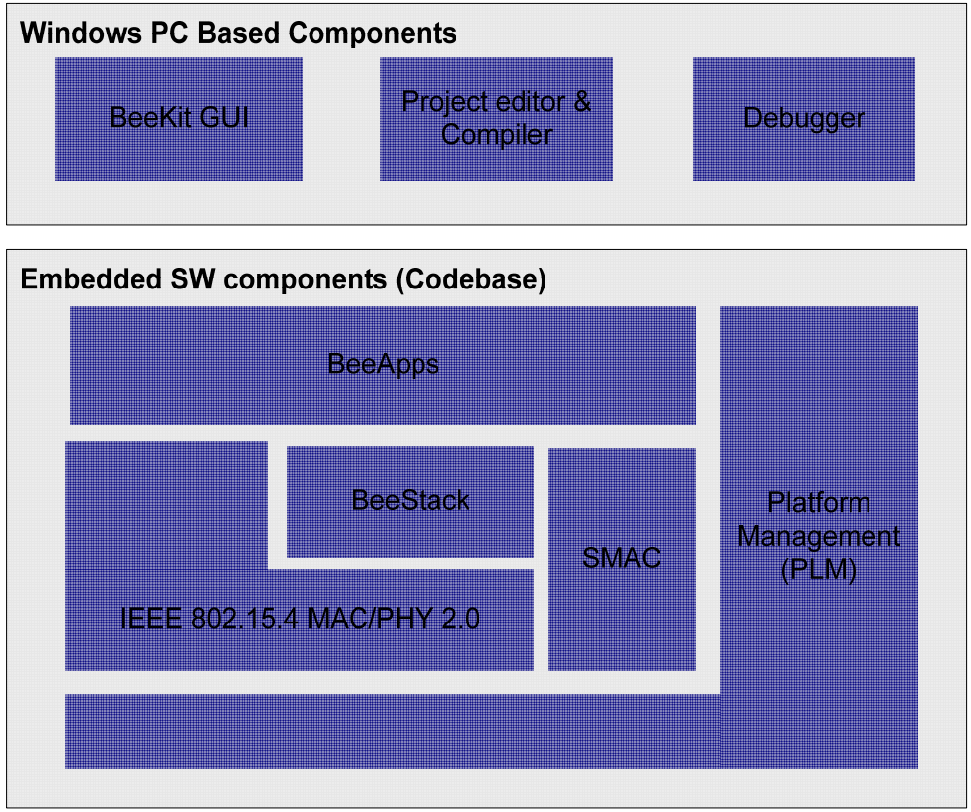

Freescale™ and the Freescale logo are trademarks of Freescale Semiconductor, Inc. All other product or service names are the property of their respective owners. © Freescale Semiconductor, Inc. 2006.

MCU’s ideal for Zigbee

Freescale™ and the Freescale logo are trademarks of Freescale Semiconductor, Inc. All other product or service names are the property of their respective owners. © Freescale Semiconductor, Inc. 2006.

MC9S08QG8/4 – Feature Set

Features

- **Memory**
  - 4k - 8k Flash, capable of EEPROM emulation
  - 1k - 2k bytes of RAM
- **Internal Clock Generator (ICG)**
  - Up to 10 MHz bus
  - FLL
  - On-chip oscillator – Requires no external components
  - External crystal support (16-pin only)
  - Separate self-clocked source for real time interrupt
  - 0.5% typical. 2% accuracy over full operating range
- **Serial Communication**
  - IIC (synchronous)
  - SPI (synchronous)
  - SCI (asynchronous)
- **Timers**
  - 2-channel Timer/PWM Module (TPM)
  - 8-bit Modulo Timer Module (MTIM)
- **Analog Modules**
  - 8-channel, 10-bit Analog-to-Digital Converter
  - Analog Comparator
- **Development Tools**
  - On chip ICE and BDM

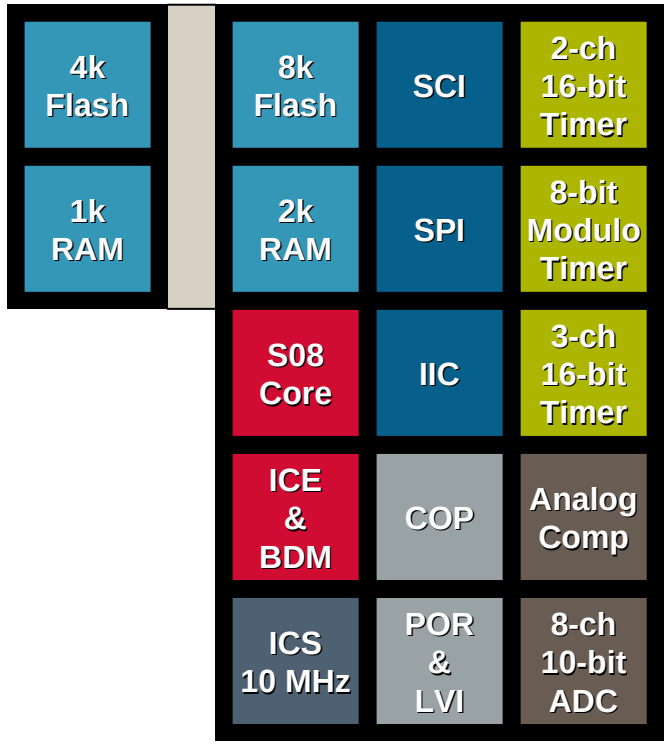

Up to 14 GPIO

Available Packages
8 DIP, 8 SOIC, 8 DFN,
16 DIP, 16 TSSOP, 16 QFN

Supply Voltage Range: 1.8V to 3.6V,
Operating Temperature: -40 to +85C

Freescale™ and the Freescale logo are trademarks of Freescale Semiconductor, Inc. All other product or service names are the property of their respective owners. © Freescale Semiconductor, Inc. 2006.

freescale™ semiconductor

MC9S08AW60/48/32/16 – Feature Set

Features

- **Memory**
  - 16k - 60k Flash, capable of EEPROM emulation
  - 1k - 2k bytes of RAM
- **Internal Clock Generator (ICG)**
  - Up to 20 MHz bus
  - FLL with 8 software selectable multipliers
  - On-chip oscillator – Requires no external components
  - Bus clock divider with 8 software selectable settings
  - Separate self-clocked source for real time interrupt
  - 0.5% typical. 2% accuracy over full operating range
- **Serial Communication**
  - IIC (synchronous)
  - SPI (synchronous)
  - 2 × SCI (asynchronous)
- **Timers**
  - 6-channel Timer/PWM Module (TPM)
  - 2-channel Timer/PWM Module (TPM)
- **Analog Modules**
  - 16-channel, 10-bit Analog-to-Digital Converter
  - Enhanced LVD
- **Development Tools**
  - On chip ICE and BDM

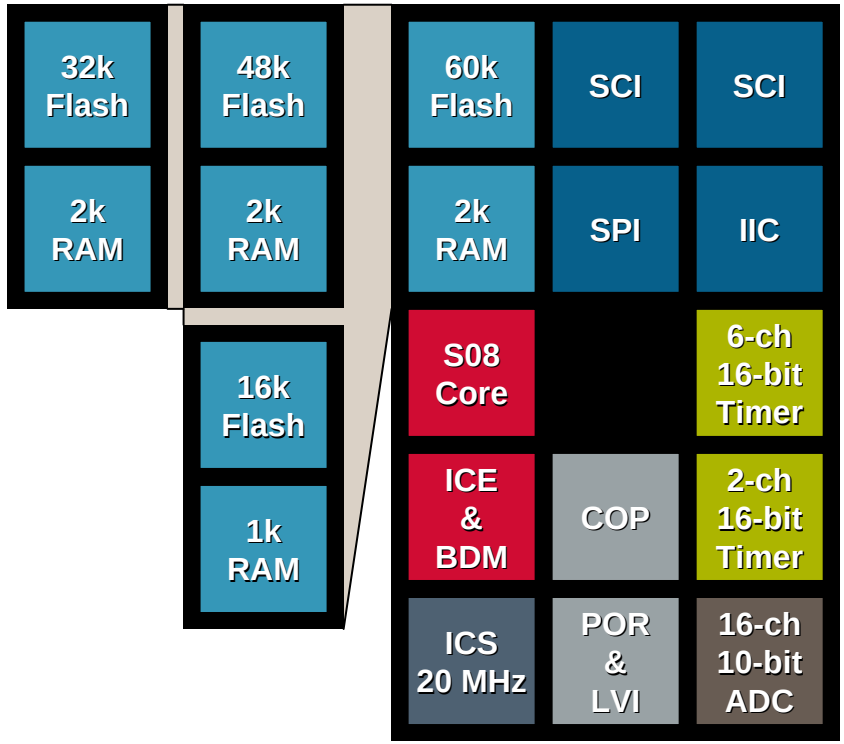

Up to 54 GPIO

Available Packages
64 QFP, 64 LQFP,
48 QFN, 44 LQFP

Supply Voltage Range: 2.7V to 5.5V,
Operating Temperature: -40 to +125C

Freescale™ and the Freescale logo are trademarks of Freescale Semiconductor, Inc. All other product or service names are the property of their respective owners. © Freescale Semiconductor, Inc. 2006.

freescale™ semiconductor

MC9S08GB60A/32A – Feature Set

Features

- **Memory**
  - 32k - 60k Flash, capable of EEPROM emulation
  - 2k - 4k bytes of RAM
- **Internal Clock Generator (ICG)**
  - Up to 20 MHz bus
  - FLL with 8 software selectable multipliers
  - On-chip oscillator – Requires no external components
  - Bus clock divider with 8 software selectable settings
  - Separate self-clocked source for real time interrupt
  - 0.5% typical. 2% accuracy over full operating range
- **Serial Communication**
  - IIC (synchronous)
  - SPI (synchronous)
  - 2 × SCI (asynchronous)
- **Timers**
  - 5-channel Timer/PWM Module (TPM)
  - 3-channel Timer/PWM Module (TPM)
- **Analog Modules**
  - 8-channel, 10-bit Analog-to-Digital Converter
  - Enhanced LVD
- **Development Tools**
  - On chip ICE and BDM

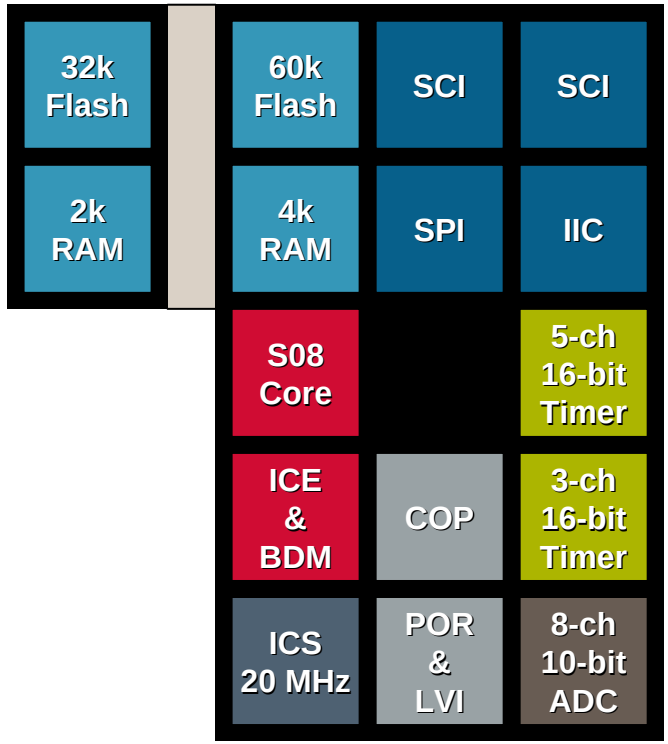

Up to 56 GPIO

Available Packages
64 LQFP

Supply Voltage Range: 1.8V to 3.6V,
Operating Temperature: -40 to +85C

Freescale™ and the Freescale logo are trademarks of Freescale Semiconductor, Inc. All other product or service names are the property of their respective owners. © Freescale Semiconductor, Inc. 2006.

freescale™ semiconductor

MC9S08GT60A/32A – Feature Set

Features

- **Memory**
  - 32k - 60k Flash, capable of EEPROM emulation
  - 2k - 4k bytes of RAM
- **Internal Clock Generator (ICG)**
  - Up to 20 MHz bus
  - FLL with 8 software selectable multipliers
  - On-chip oscillator – Requires no external components
  - Bus clock divider with 8 software selectable settings
  - Separate self-clocked source for real time interrupt
  - 0.5% typical. 2% accuracy over full operating range
- **Serial Communication**
  - IIC (synchronous)
  - SPI (synchronous)
  - 2 × SCI (asynchronous)
- **Timers**
  - 2-channel Timer/PWM Module (TPM)
  - 2-channel Timer/PWM Module (TPM)
- **Analog Modules**
  - 8-channel, 10-bit Analog-to-Digital Converter
  - Enhanced LVD
- **Development Tools**
  - On chip ICE and BDM

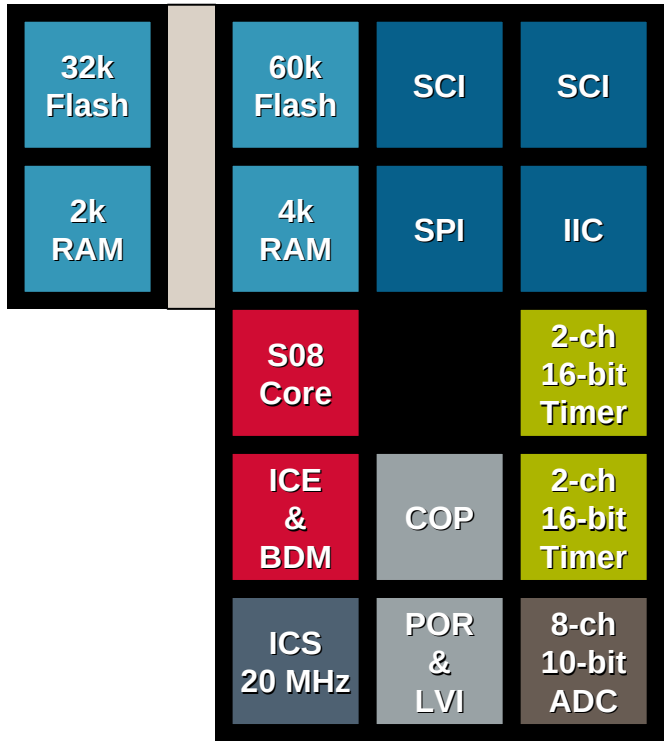

Up to 39 GPIO

Available Packages
48 QFN, 44 QFP

Supply Voltage Range: 1.8V to 3.6V,
Operating Temperature: -40 to +85C

Freescale™ and the Freescale logo are trademarks of Freescale Semiconductor, Inc. All other product or service names are the property of their respective owners. © Freescale Semiconductor, Inc. 2006.

freescale™ semiconductor

ZigBee Solutions – Platforms

Freescale™ and the Freescale logo are trademarks of Freescale Semiconductor, Inc. All other product or service names are the property of their respective owners. © Freescale Semiconductor, Inc. 2006.

MC13192 Developers Starter Kit

- Affordable demonstration system
- SMAC and IEEE 802.15.4 network development
- 2 Sensor Applications Reference Boards (SARD)
  - Based on Freescale's MC13192 and MC9S08GT60 MCU
  - Integrated X-Y and Z-axis acceleration sensors (MMA6261Q, MMA1260D)
  - LEDs and switches for demonstration monitoring and control
  - Onboard Background Debug Module port for MCU flash reprogramming and in-circuit hardware debugging
  - RS-232 port for monitoring and Flash programming
  - Range approximately 125m line-of-sight
- Dual printed antenna reference design
- Power Adapters, Batteries and Cables
- USB Multilink BDM Programmer/Debugger
  - 13192DSK-BDM-A00

- Includes Metrowerks CodeWarrior™ Development Studio for HCS08 16 KB Special Edition
- SMAC Source Code and Sample Apps
- IEEE 802.15.4 Object Code and Test Tools
- Orderable part number:
  - 13192DSK-A00: Suggested resale: $199 USD
  - 13192DSK-BDM-A00: Suggested resale $299 USD

Freescale™ and the Freescale logo are trademarks of Freescale Semiconductor, Inc. All other product or service names are the property of their respective owners. © Freescale Semiconductor, Inc. 2006.

freescale™ semiconductor

MC13192 Sensor Applications Reference Board

MC13192
Transceiver

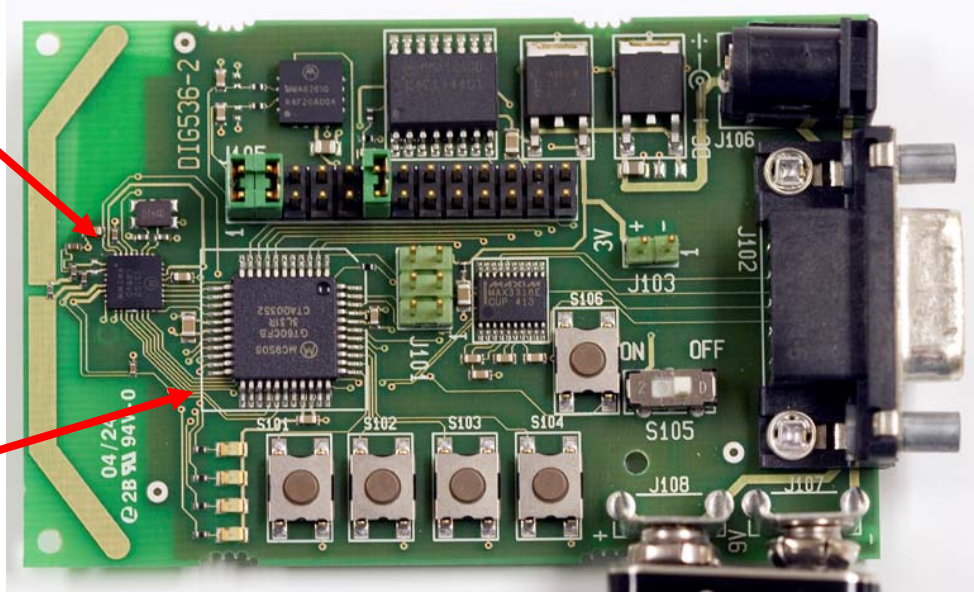

MC9S08GT60
MCU

Freescale™ and the Freescale logo are trademarks of Freescale Semiconductor, Inc. All other product or service names are the property of their respective owners. © Freescale Semiconductor, Inc. 2006.

freescale™ semiconductor

Our Hardware - SARD Board

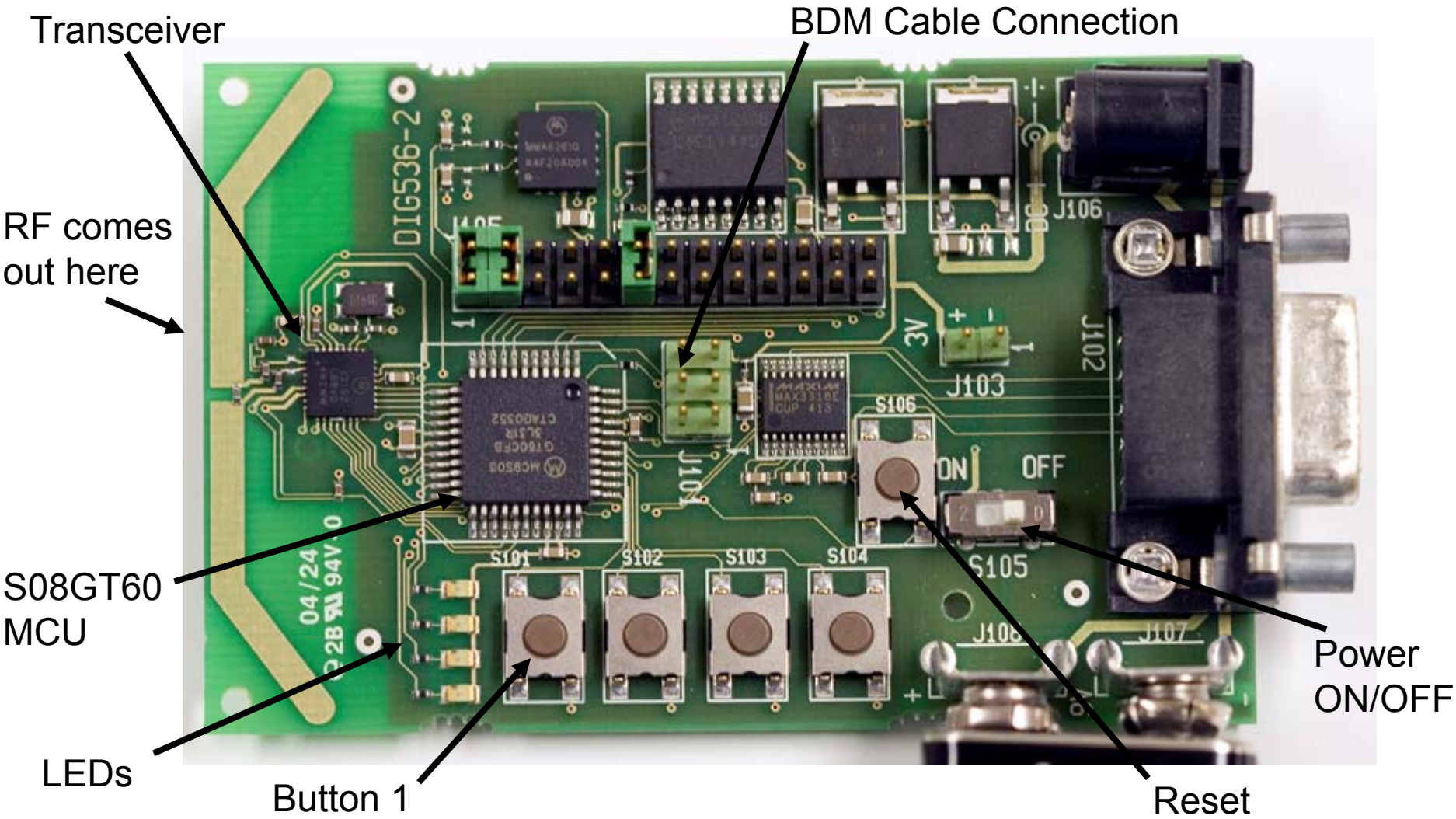

Freescale™ and the Freescale logo are trademarks of Freescale Semiconductor, Inc. All other product or service names are the property of their respective owners. © Freescale Semiconductor, Inc. 2006.

freescale™ semiconductor

MC1321X Development Kits

- ►2nd generation development kit
- ►Hardware
  - End Node
    - 13213-SRB
  - Coordinator/Router Board
    - 13213-NCB
- ►Features/Benefits
  - MC13213 ZigBee-compliant 2.4GHz SiP
  - MMA7260Q 3-axis Acceleration Sensor (13213-SRD only)
  - Temperature Sensor (13213-SRD only)
  - Printed F antenna
  - Onboard expansion capabilities for external application-specific development activities
  - LEDs and switches for demonstration monitoring and control
  - LCD for demonstration messaging (13213-NCB only)
  - Connections for battery or external power supply
  - RS232 and USB
  - USB Multilink BDM Debugger/Programmer (-BDM kits only)
  - Scalable Software support for easy development of customer specific network topologies

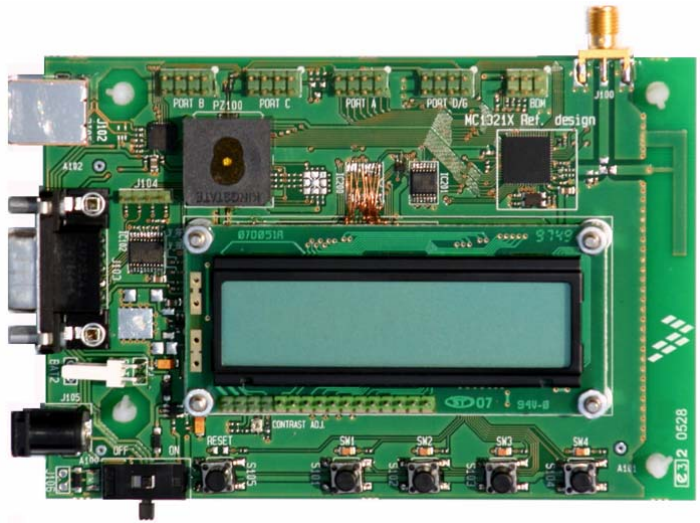

Freescale™ and the Freescale logo are trademarks of Freescale Semiconductor, Inc. All other product or service names are the property of their respective owners. © Freescale Semiconductor, Inc. 2006.

freescale™ semiconductor

MC1321X Network Coordinator Board

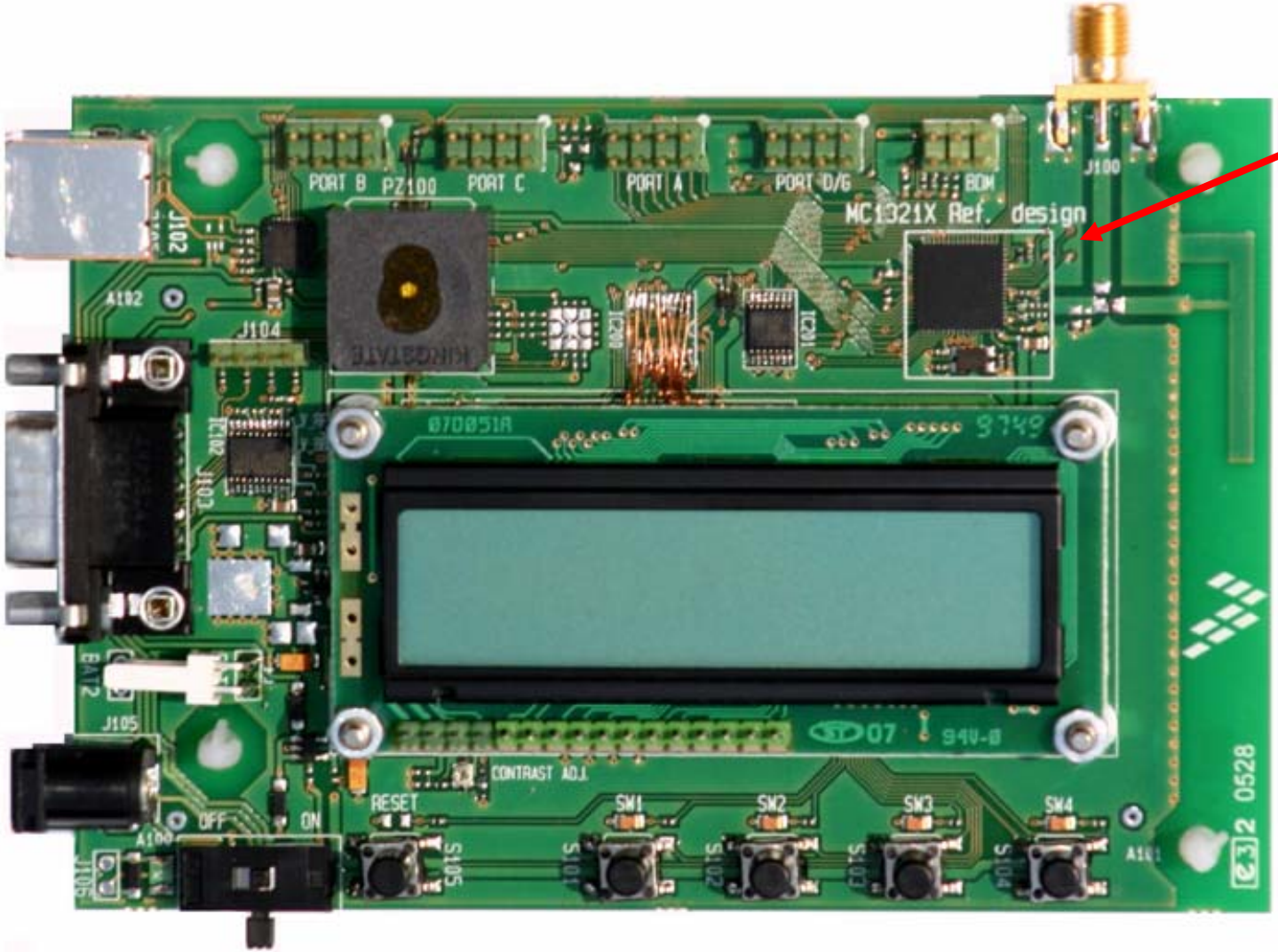

MC13213
MCU + Transceiver

Freescale™ and the Freescale logo are trademarks of Freescale Semiconductor, Inc. All other product or service names are the property of their respective owners. © Freescale Semiconductor, Inc. 2006.

freescale™ semiconductor

RD3152MMA7260Q: ZigBee Sensing Triple Axis Reference Design (ZSTAR)

RD3152MMA7260Q Features:

Provides robust wireless communication using the powerful, easy-to-use 2.4GHz frequency MC13191 transceiver.

System Features:

- Consumer and industrial wireless sensing applications
- Demo Modules for 6 sensing functions - Fall, Tilt, Motion, Positioning, Shock and Vibration - for multifunctional applications.

Hardware Features:

- Pin to pin compatible with MC13192 and MC13193 allowing implementation of ZigBee applications.
- MC68HC908JW32 (USB 2.0 Full Speed) and MC9S08QG8

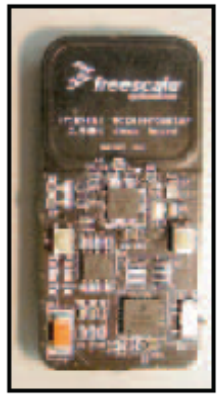

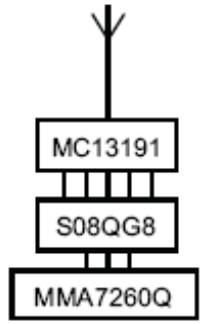

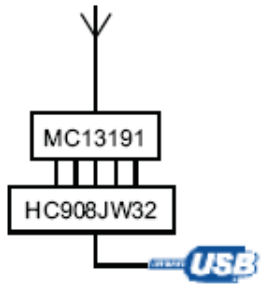

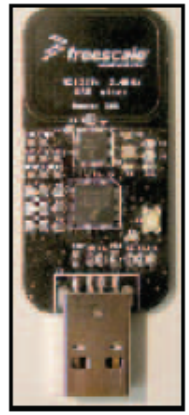

Freescale™ and the Freescale logo are trademarks of Freescale Semiconductor, Inc. All other product or service names are the property of their respective owners. © Freescale Semiconductor, Inc. 2006.

freescale™ semiconductor

ZSTAR DEMO RD3152MMA7260Q

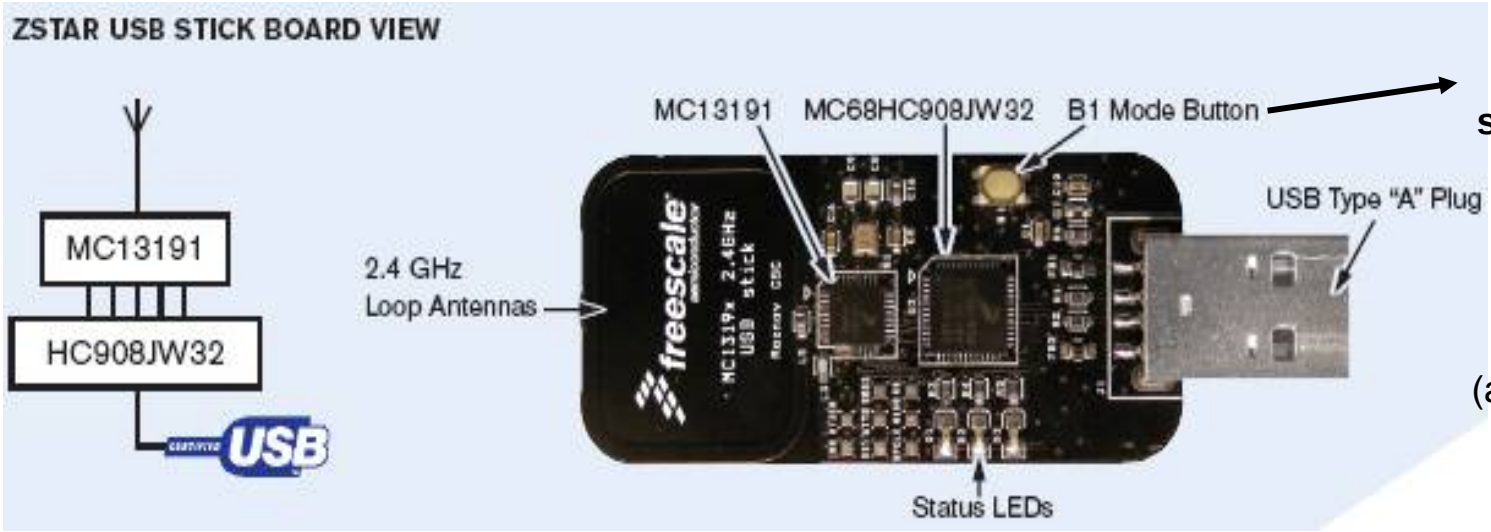

B1 Mode Button to select 2 basic modes:

1) Mouse-pointer (no seperate GUI needed)

2) Datatransfer – (additional GUI needed)

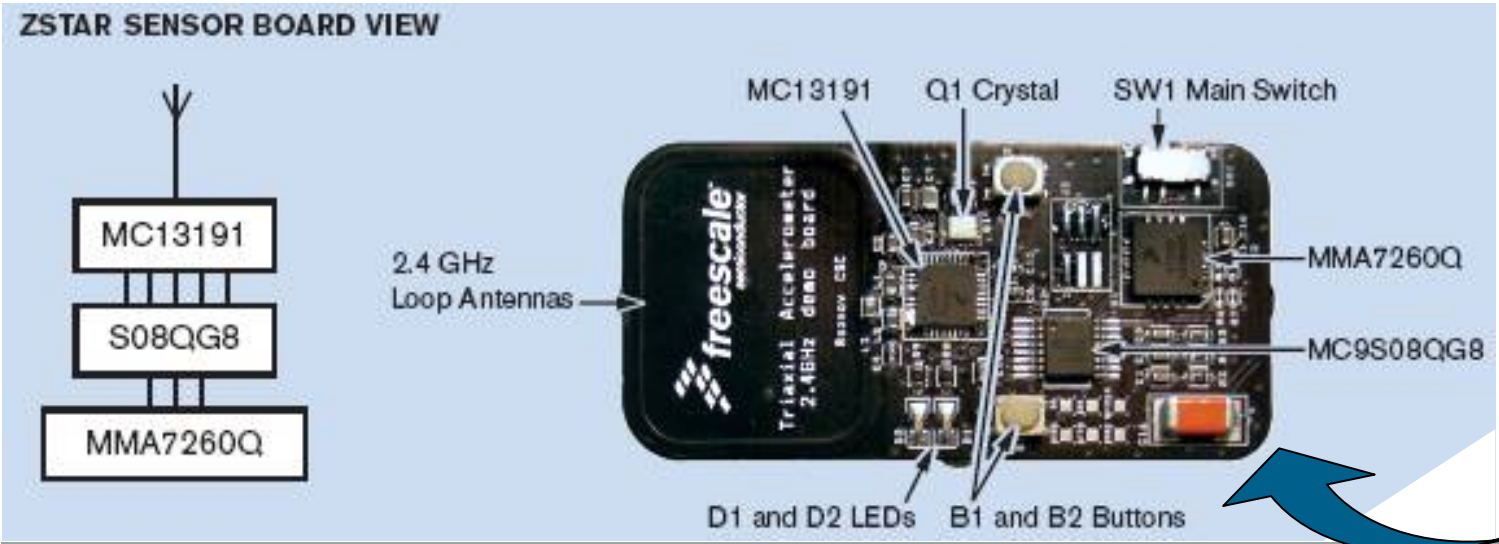

3V battery On backside

CR2032 or DL2032

(Not included !)

Freescale™ and the Freescale logo are trademarks of Freescale Semiconductor, Inc. All other product or service names are the property of their respective owners. © Freescale Semiconductor, Inc. 2006.

freescale™ semiconductor

MC908JW32 – USB-MCU used in ZSTAR DEMO

- **Supply Voltage/ Performance**
  - 3V – 5.5V Operating Voltage, 8MHz bus operation
- **Core**
  - 8bit HC08 core upward compatible with HC05
- **Memory**
  - 32K Flash, 1K bytes of RAM
- **Communications**
  - USB 1.1/2.0 PHY with Full speed transfer capability, SPI
- **Features/ Benefits**
  - 1 x 2 channels 16bit Timer, PS2 Clock Generator, Time base wakeup module, 2 dedicated external interrupt, 12 individual LED driver, Up to 34 GPIO
- **Available Packages**
  - 48 QFN, 52 QFP

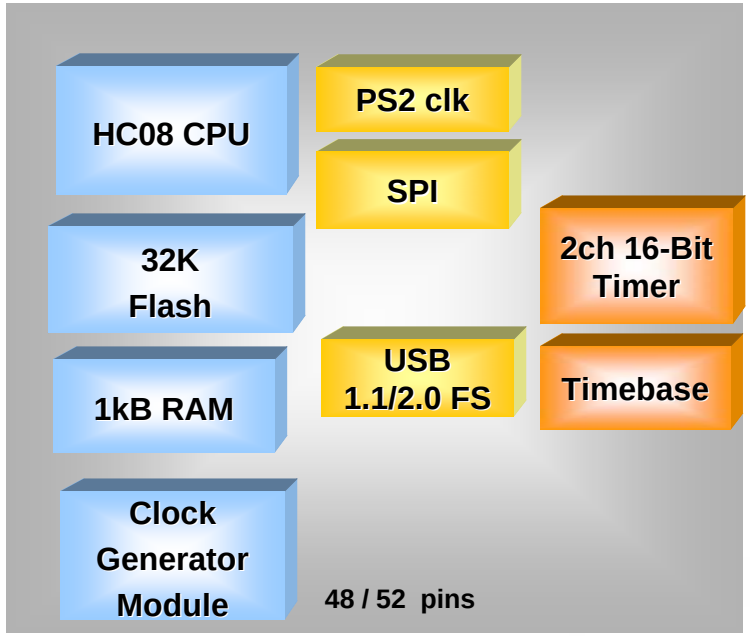

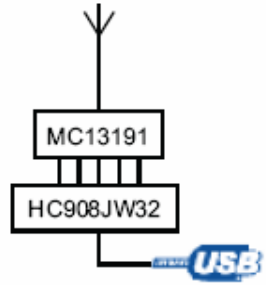

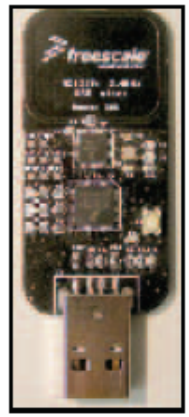

Freescale™ and the Freescale logo are trademarks of Freescale Semiconductor, Inc. All other product or service names are the property of their respective owners. © Freescale Semiconductor, Inc. 2006.

freescale™ semiconductor

MC9S08QG8 – MCU used in ZSTAR DEMO

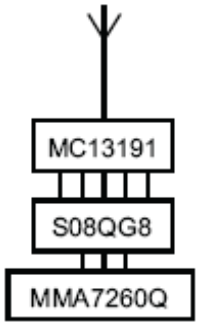

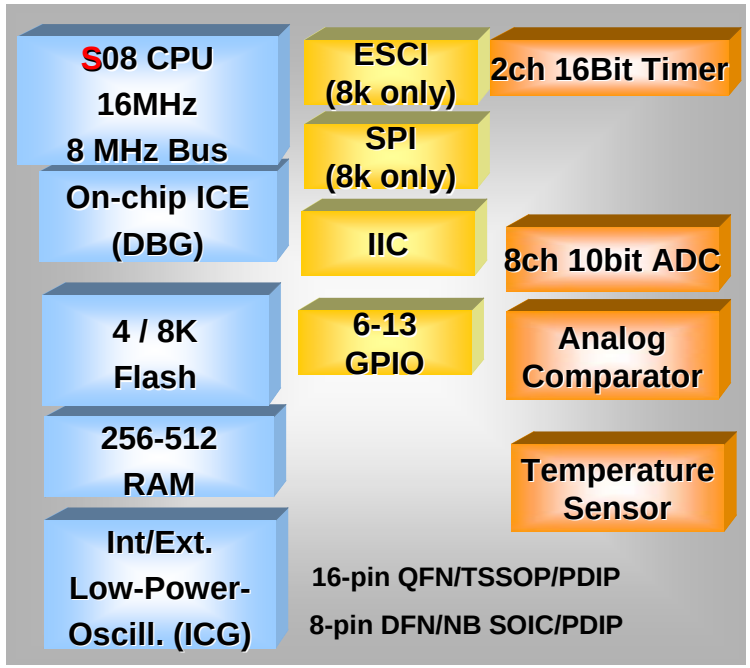

Key Features/Benefits

Supply Voltage
1.8V – 3.6V, -40C to +125 C
Core: 16MHz HCS08 Core/ 8MHz Bus Frequency
Memory : 4kB - 8kB Flash/ 256B - 512B RAM
Communications: ESCI, SPI, IIC
Features/ Benefits:
- 8MHz Internal @ 1.8V – 3.6V
- Flash Read/Write @ 1.8V
- Internal Osc (2% Precision over temp. & frequency)
- On-chip ICE (DBG)
- Background Debug Controller (BDC)
- 2-ch, 16-bit, IC/ OC, or PWM
- COP, 10-bit ADC, ICS with FLL, LVI, RTI
- Up to 13 GPIO
- Power Saving Modes
- On-chip temperature Sensor
- Pincompatibility to 9S08QD4 & 9RS08KA2 (8-pin)

Available Packages
16-pin SOIC/TSSOP/PDIP
8-pin DFN/SOIC/PDIP

Target Applications:
Electronic power meters, Sensors, Wireless comm.
Home appliances, Security systems, etc…

	Flash	RAM	Timer	I/O	Serial	ADC	Package
9S08QG8	8K	512	2 ch 16bit IC/OC/PWM	13	I2C, SCI, SPI	8ch 10bit	16 pin PDIP/QFN/TSSOP
9S08QG8	8K	512	1 ch 16bit IC/OC/PWM	6	I2C	4ch 10bit	8 pin PDIP/NB-SOIC/DFN
9S08QG4	4K	256	2 ch 16bit IC/OC/PWM	13	I2C, SCI, SPI	8ch 10bit	16 pin QFN/ TSSOP
9S08QG4	4K	256	1 ch 16bit IC/OC/PWM	6	I2C	4ch 10bit	8 pin NB-SOIC/DFN/PDIP

Freescale™ and the Freescale logo are trademarks of Freescale Semiconductor, Inc. All other product or service names are the property of their respective owners. © Freescale Semiconductor, Inc. 2006.

freescale™ semiconductor

- For the first time: True 8 bit to 32 bit **Processor Continuum**
- Wide range of competitive **low power/low cost** 8 bit MCUs which fit to your application.
- Comprehensive, **free/low cost, easy to use** development tools - Fast Track
- Full **ZigBee solution** hw/sw including ZeeStack, BeeKit, SiP and PiP

Freescale™ and the Freescale logo are trademarks of Freescale Semiconductor, Inc. All other product or service names are the property of their respective owners. © Freescale Semiconductor, Inc. 2006.

ZSTAR – characteristics to demonstrate

Sensing Triaxis Accelerometer Reference (STAR) board

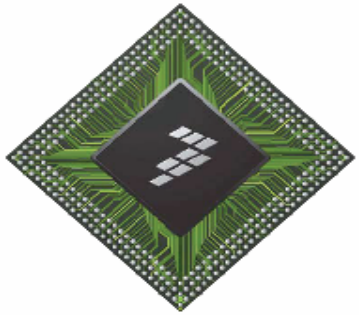

The ZSTAR Demo

Tilt

- Tilt
- Anti-Theft Alarm
- PDA Scrolling
- Digitally Filtered Tilt

General

- Raw Data

Motion

- Battery Saver
- FreeFall
- Load Imbalance

Shock

- Shock Detection
- Shipping and Handling

Position

- XYZ

Orientation

- Scope

Tools

- Exit
- Help!
- Calibrate
- Acquire Data
- G-Select

freescale™ semiconductor

freescale™
semiconductor

Freescale™ and the Freescale logo are trademarks of Freescale Semiconductor, Inc. All other product or service names are the property of their respective owners. © Freescale Semiconductor, Inc. 2006.

freescale™ semiconductor